# CFD Pre-Processor

# for Steady State Analysis



COPY COMPLIANT to the original document resident on the computer system at the time of printing

# Index

1. Purpose. ..... 3

2. Scope. ..... 3

3. Abbreviations. ..... 3

4. General procedure: description. ..... 3

**4.1 Importing Mesh** ..... 4

**4.2 Type of Analysis** ..... 5

**4.3 Model Fluids** ..... 6

**4.4 Boundary Conditions and Interfaces** ..... 9

**4.5 Solver Control** ..... 14

**4.6 Expression and Monitor** ..... 15

**4.7 Setting files for batch mode** ..... 17

**4.8 Summary of the setting** ..... 18

5 Acceptance criteria. ..... 19

6 References ..... 22

Annex A ..... 23

Annex B: Pump type (*API STANDARD 610)* ..... 37



*COPY COMPLIANT to the original document resident on the computer system at the time of printing*

# 1. Purpose.

The document describes a guideline to realize a model of pump in a CFD environment to be simulated in steady-state conditions.

A specific example using ANSYS PRE POST environment is described in the Annex A.

# 2. Scope.

This procedure is applicable to any centrifugal pumps. It can be used to single pump components or complete pump assemblies.

The procedure is applicable for the Nova Milanese and La Spezia plants.

# 3. Abbreviations.

| | | |
|---|---|---|
| ***1$^{ST}$*** | | *First Stage model* |
| ***B.C.*** | | *Boundary Condition* |
| ***CFD*** | | *Computational fluid Dynamics* |
| ***CP*** | | *Complete Pump model* |
| ***CPnobl*** | | *Complete Pump without balancing line model* |
| ***Eta*** | *[%]* | *efficiency* |
| ***H*** | *[m]* | *head* |
| ***Nq or Ns*** | | *specific speed of the pump* |
| ***OS/OV/OD*** | | *Only Suction/ Only Volute/ Only diffuser model* |
| ***Q*** | *[m^3/h]* | *flowrate* |
| ***SST*** | | *Shear Stress Transport* |
| ***Stlast*** | | *Last Stage model* |
| ***STnext*** | | *Next stage model* |
| ***SYM*** | | *Symmetric pump model* |

# 4. General procedure: description.

The guideline provides general instructions to set up a CFD analysis to be simulated in steady-state conditions.

The pump models that can be prepared in this guideline are listed below:



COPY COMPLIANT to the original document resident on the computer system at the time of printing

| High fidelity (complete pump) | Simplified model | Single component |
|---|---|---|
| - CP<br>- CPnobl | - 1ST<br>- SYM<br>- STnext<br>-STlast | - OS<br>- OV<br>- OD |

*Table 1 : list of CFD models*

These pump models refers to the complete pump or a portion of it.

In the preliminary phase the simplified model and single component models share the same setting except for the STnext, STlast, OV and OD models which require particular boundary conditions extracted from the complete pump models.

In this model the fluid processed is single-phase, so no NPSH calculation can be provided.

Basically, the outcomes of a steady state analysis are:

- For the pump or stage, the performance in terms of head and efficiency, power and losses for static component.
- For the Single component, the static losses and flow field distribution.

A general discussion is presented below, with the aim to provide the user with the necessary information and recommended criteria for setting a CFD model using general purpose tools of Pre-Processors (some examples are CFX PRE, Fluent, Open Foam, etc.).

## 4.1 Importing Mesh

Usually in the mesh import phase, regardless of the preprocessing tool, it is necessary to select the type of mesh or meshing tool, if required, and the measurement scale is the orientation with respect to the orthonormal reference system. It is always necessary to verify that the rotation axis of the blade passage is always coincident with one of the axes of the orthonormal reference system.

Whenever the numerical analysis faces with an assembly of several hydraulic fluid domains special care must be done during the spatial connection between the numerical components:



COPY COMPLIANT to the original document resident on the computer system at the time of printing

- Each single component must be spatially aligned to the neighbor in order to eliminate any clearance
- The sense of rotation of impeller or diffuser components must be checked. If some inverse rotation is detected, then the components must be properly mirrored
- Whenever a double suction pump is analyzed, special care must be taken during the realization of the whole impeller double suction domain. Usually, the mesh of the impeller is referred to a single vane of a single suction, so, to create the whole double suction impeller the following actions are required:
    - Create the domain of each side of the impeller by copying the vane domain in the tangential direction for the number of blades. Check if the mesh and the number of blades are conformal.
    - Mirror the domain of the whole impeller side to realize the complete double suction impeller component. No mesh overlap in the symmetry plane is admitted.
    - If the impeller blades are staggered in the pitchwise direction, a rotational offset of the blades must be applied on a side of the assembly, considering the staggering angle defined in the reference hydraulic design.
    - If the impeller is symmetric the internal disk of the impeller has a diameter lower than the blade trailing edge and the final part of the blades in streamwise direction are connected together. In this case a split of the hub surface must be created, to divide the internal disk surface from the symmetry plane.

## 4.2 Type of Analysis

For these models a stationary simulation is required, even if it is known that the simulation of a pump in operating conditions is clearly of a transient type, the reasons are:

- there is a relative motion between the rotor and stator components.
- there are turbulent phenomena that originate within the fluid flow field.

The reasons why a stationary simulation is required are listed below:

- a stationary simulation requires lower computation times than an un-stationary simulation.
- the results of a stationary simulation can be used as initialization (initial boundary condition) to start its relative un-stationary simulation.



COPY COMPLIANT to the original document resident on the computer system at the time of printing

- it is advantageous to use in the analysis of stator components (see OS, OV, OD).

On the other hand, the results obtained from a stationary simulation of pump, even if achieved in reduced times, cannot be considered as reliable in absolute value.
In the redesign phase if the timing of the required activity is reduced and the model is particularly expensive to analyse in terms of computational costs it is necessary to adopt this simplified approach.
To do this, it is important to follow the following steps:

1) perform a first stationary simulation and then a transient one to obtain the difference in terms of performance.
2) perform an activity of redesign of the pump using only stationary simulations.
3) use graphs to follow the trend of the performance results in terms of Head, Efficiency and Hydraulic losses.
4) at the end of the redesign activity, verify the performance results in absolute terms using the unsteady state simulation of the best case obtained from the previous phase.

This setting works only when the flow developing in the pump is not strongly turbulent, therefore when dynamic phenomena and separation of the flow from the wall affect negatively on convergence of the calculation, otherwise a transient simulation is necessary because the results may not be consistent with the simulated geometry.

## 4.3 Model Fluids

Domains are regions of space in which the equations of fluid flow or heat transfer are solved and are created from a list of Assemblies, 3D primitive regions and/or 3D composite regions that are associated with a volume of an imported mesh.

In some cases, separate domains must be connected via a domain interface, while in other cases, no interface is required, or a default interface is created and is suitable.

Within fluid, internal 3D regions can be assigned to a subdomain and boundary conditions can be applied to any bounding surface of a 3D region that is included in a domain.

The Solver uses the concept of domains to define the region of the fluid, the type, the properties, the morphology and the equations applied on it; are described below:


COPY COMPLIANT to the original document resident on the computer system at the time of printing

**Material proprieties of fluid**

The fluid processed during the simulation must be correctly defined. Depending on the calculation type that will be performed, several fluid properties must be set.
Table 2 shows the physical properties of water (and other example) necessary and sufficient to characterize the fluid in a thermo-fluid dynamic simulation:

| | Example of fluid | | |
|---|---|---|---|
| Material proprieties | Water | Air | Water Vapour |
| Thermodynamics state | liquid | gas | gas |
| Ref. temperature [°C] | 25 | 25 | 25 |
| Ref. pressure [bar] | 1 | 1 | 0.03169 |
| Ref. spec enthalpy [J/kg] | 0 | 0 | -13424249 |
| Ref. spec entropy [J/(kg*K)] | 0 | 0 | 10475.125 |
| molar mass [kg/kmol] | 18.02 | 28.96 | 18.02 |
| density [kg/m^3] | 997 | 1.185 | 0.022308 |
| Specific heat capacity [J/(kg*K)] | 4181.7 | 1004.4 | 1911.6 |
| Dynamic Viscosity [kg/(m*s)] | 0.0008899 | 0.00001831 | 0.0000098626 |
| Thermal Conductivity [W/(m*K)] | 0.6069 | 0.0261 | 0.01854 |
| thermal expansivity [1/K] | 0.000257 | 0.003356 | 0.003356 |

*Table 2 : Material proprieties*

Usually, each solver already has a library of chemical-physical properties of materials; if the fluid you want to model does not exist, you can create it within the library.

In our case, the fluid that will be simulated is water, as reported in the first column of the table.

**Morphology of fluid**

Morphology is used to describe the connectivity or distribution of the fluid, in fact it can take different forms, in the simplest case as a single continuous fluid (homogeneous and uniform in space), or as


COPY COMPLIANT to the original document resident on the computer system at the time of printing

a dispersed fluid, that is a fluid that transports and enters with a dispersed solid or gaseous phase or vice versa.

Generally, the morphology used for water during the pump simulation is continuous (even if inside the water there is always a gaseous and solid phase). This setting helps to reduce the computational effort.

**Reference Pressure of model**

In this section it is necessary to set the absolute reference pressure level of the entire physical system.

The value to be set is equal to Pref=1atm, this represents the reference pressure for all pressures imposed as boundary conditions and subsequently simulated.

**Buoyancy Model**

For flows where gravity is important, it is necessary to include the buoyancy term.

It is therefore necessary to insert the gravitational components in the x, y and z directions with respect to the coordinate system for which the domain is oriented.

The buoyancy model is significant for slow and multiphase flows where the natural convection term is predominant, in our case it is not necessary to insert it.

**Domain Motion**

In the pump model it is necessary to set the rotation for all the fluid domains that are placed in rotation (impeller domains), therefore it is necessary to define the angular velocity of the pump and the rotation axis of the system.
While all the remaining fluid domains that do not undergo a rotation imposed with respect to the rotation axis of the global reference system of the system it is necessary to set the stationarity condition.

**Equation of Heat Transfer**



COPY COMPLIANT to the original document resident on the computer system at the time of printing

The exchange of work between the impeller and the fluid occurs at almost constant temperature; in the fluid model it is therefore necessary to set the isothermal transformation condition.
These equations must be used only if a thermal analysis on the pump is required

**Turbulence of model**

Turbulence can be modelled using a variety of approaches, including DNS (Direct Numerical Simulation), LES (Large Eddy Simulation), and RANS (Reynolds-averaged Navier-Stokes) modelling.

In our case we set the turbulence model SST (Shear Stress Transport); this model is part of RANS approach, it is widely used in industry, particularly in turbomachinery. GEKO model is another powerful tool to evaluate turbulence on the whole pump, and is suggested when strong separation are detecheted. This tool is actually under investigation

## 4.4 Boundary Conditions and Interfaces

Boundary conditions must be applied to all the bounding surface in our domain (see Figure 1); the boundary conditions can be:

- Inlet
  - Flow rate
  - Velocity distribution
- Outlet
  - Pressure
- Opening
- Wall
- Symmetry plane

Instead, in the internal connection surfaces between fluid domains, it is necessary to select the names of the two or more side of domains and the type of interface, which can be:

- General connection
- Sliding interfaces (Frozen rotor, Stage (mixing-plane))
- Periodic (Rotational)



COPY COMPLIANT to the original document resident on the computer system at the time of printing

Interfaces deserve a more in-depth treatment because the exchange of information through it must occur either if the two meshes are of different types (for example a hexahedral mesh with a tetrahedral one) either if the two fluid domains are rotor and stator. Thanks to numerical algorithms and multiple reference systems, the treatment of interface flows is completely implicit and conservative in terms of mass, momentum, energy, therefore without any penalty in terms of robustness or convergence speed.

In our case the following types of interfaces could be used in our domains:

-“Stage” or “mixing plane”: are simple interfaces that generate an averaged value of the fluid dynamics variables between the interfaces. It’s the best way to speed up the simulation of pump stages because it requires only one vane of the rotating part and one vane of the static part, reducing the computational grid and consequently the computational effort.

-“Periodic”: Rotational periodicity can be used in impellers and bowls (of vertical pumps) when you want to simulate a single vane rather than the entire impeller or diffuser.

- “Frozen Rotor” because in steady simulation the two reference system of each frame are connected in such a way that they each have a fixed relative position throughout the calculation.

- “General Connection” between two static domains.

In the following example in Figure 1 a three-stage BB5 pump model (CPnobl) is shown.



COPY COMPLIANT to the original document resident on the computer system at the time of printing

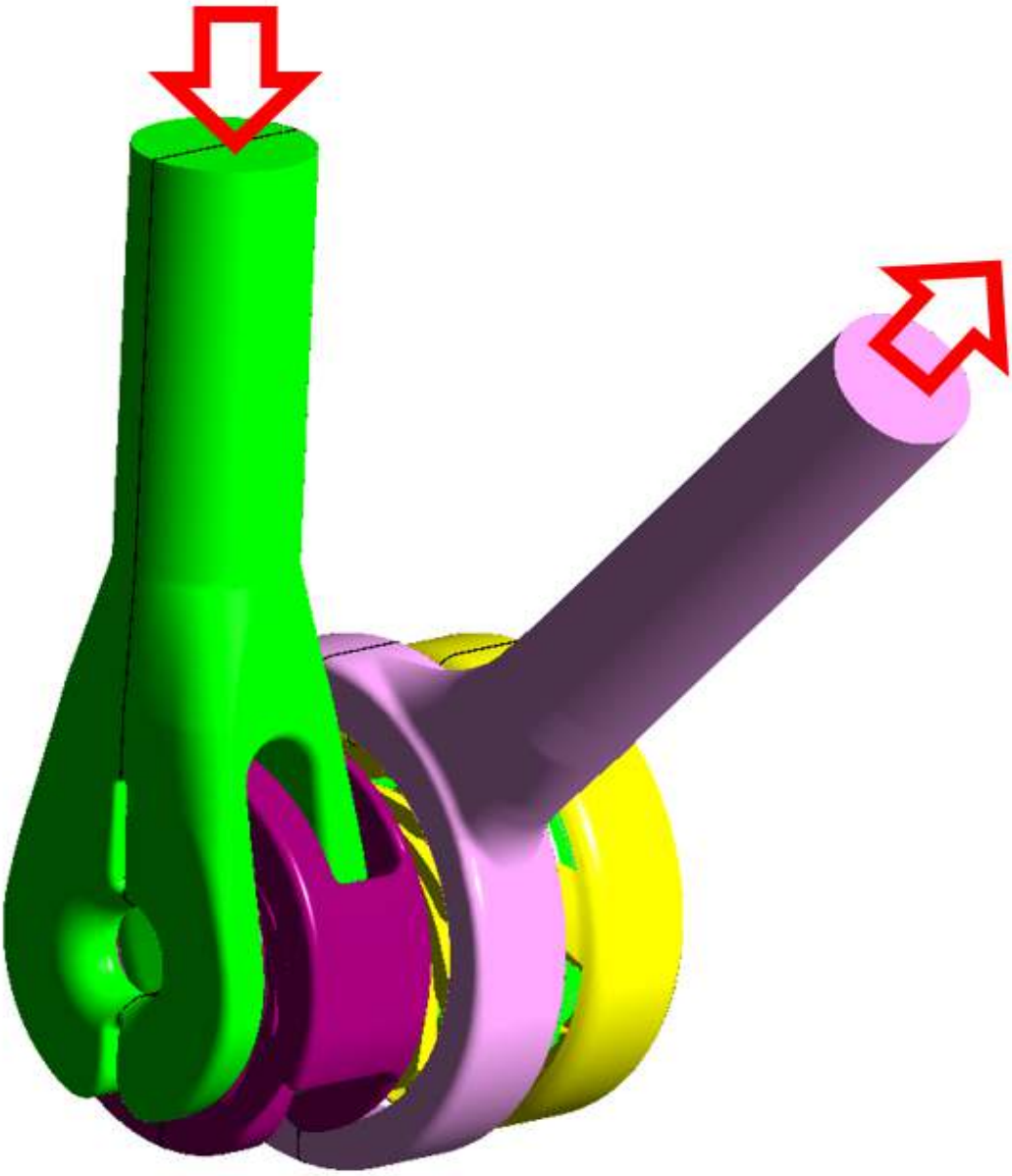

*Figure 1 : Example of model pump BB5 3 stages*

In Figure 2 the meshed fluid domains are shown with a meridian section, while the different rotor and stator components that make up the pump in question are highlighted with different colours.



COPY COMPLIANT to the original document resident on the computer system at the time of printing

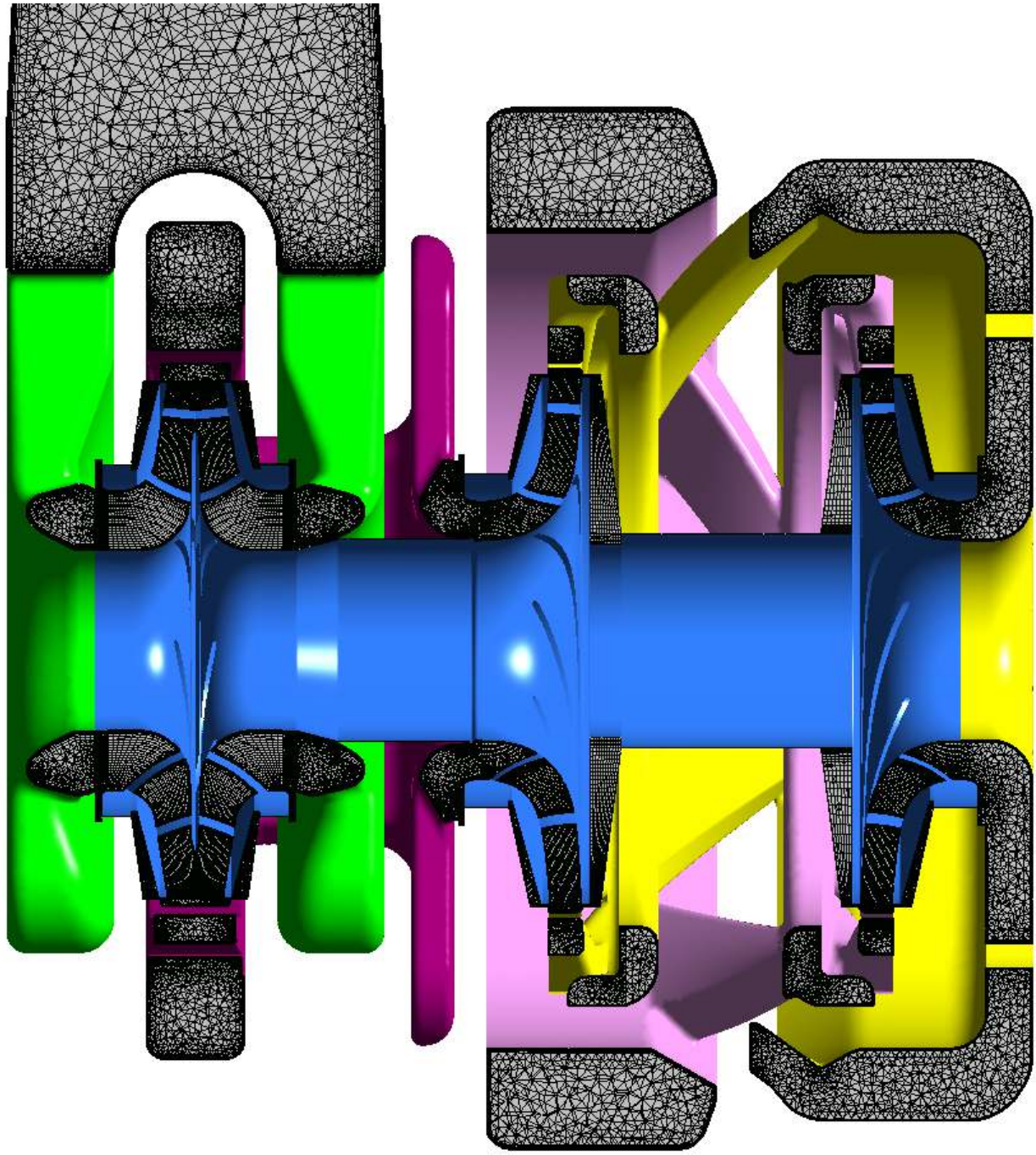

*Figure 2 : Meridian section and different fluid domain of pump BB5 3 stages*

In Figure 3 shows all the rotor surfaces of the model for which it is necessary to set the angular velocity of the pump.



COPY COMPLIANT to the original document resident on the computer system at the time of printing

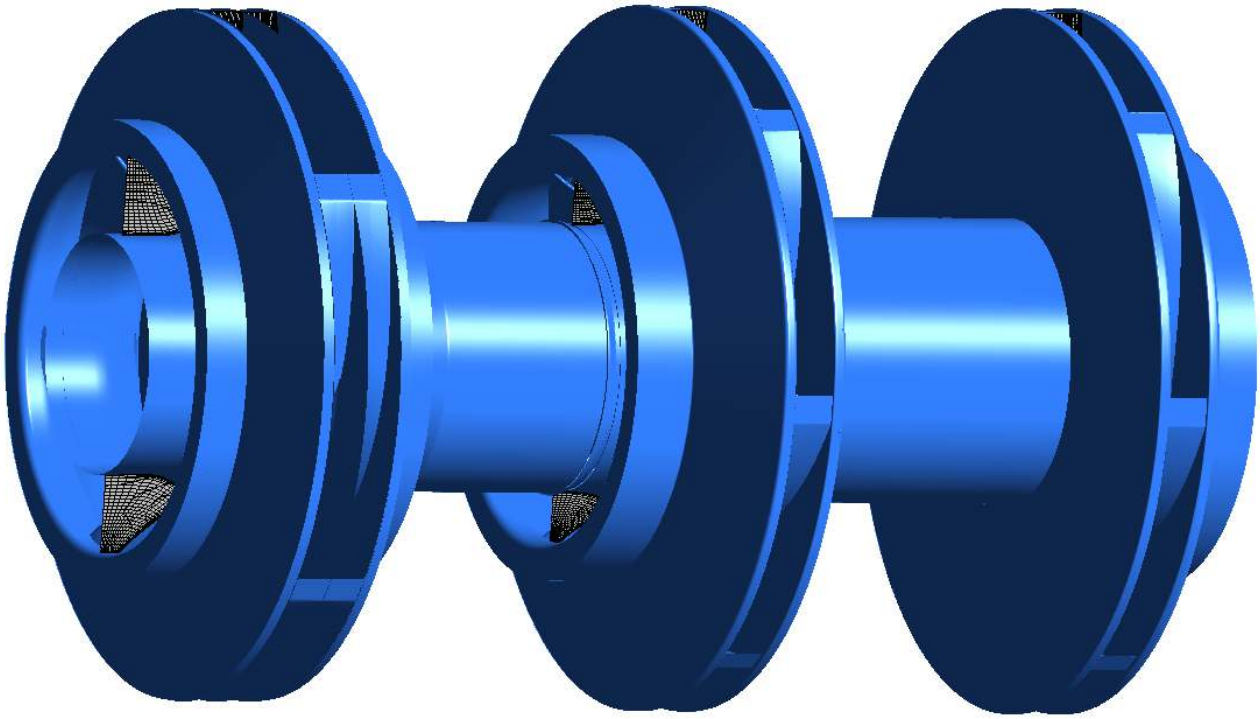

*Figure 3 : rotor group of the model pump BB5 3 stages*

Table 3 shows the operating conditions and the boundary conditions to be applied on the domain patches.

| Operating Condition | Assignment B.C. | Color patch |
|---|---|---|
| Rotational Speed [rpm] | Blade, hub, shroud | blue |
| Total pressure [Pa] | Inlet | green at inlet |
| Mass flow rate [kg/s] | Outlet | pink at outlet |
| Wall Roughness [micron] | Blade, hub, shroud | green, purple, yellow, pink, blue, with the except of inlet outlet and interface surfaces |

*Table 3 : Assignment B.C.*



COPY COMPLIANT to the original document resident on the computer system at the time of printing

The roughness value depends on the type of manufacturing, that is, whether the different component of the pump are created starting from a mechanical casting or whether they are made entirely with mechanical processing (such as by means of numerically controlled precision machines):

- From sand casting of impeller with external diameter lower than 600mm: Ra 6.3 (8 micron)
- From sand casting process of impeller with external diameter greater than 600mm Ra 12.5 (15micron)
- From sand casting process of casing Ra 25 (30micron)
- From ceramic or investment casting process or CNC machined: smooth roughness

Some detailed settings of the Inlet B.C are the subsonic flow regime, the normal flow direction and the turbulent intensity equal to 5%.

## 4.5 Solver Control

To solve a fluid dynamics simulation, the Navier-Stokes equations are used, these are a set of coupled partial differential equations that take into account the continuity equation, the moment and the energy.

Through the use of CFD it is possible to solve these equations numerically using discretized volumes and time intervals.

The choice of the discretization of the fluid volume occurs in the previous meshing phase, and once the mesh is created the dimensions of the finite volumes are fixed, while the time interval and its management are set within the Solver, the main choice falls on the type of numerical scheme, first order, second order or second order + up-wind.

In our case, since we are using a stationary simulation, a first-order scheme is sufficient.

In the steady state cases the solver applies a false time step as a means to under-relax the equations while they iterate towards the final solution.



COPY COMPLIANT to the original document resident on the computer system at the time of printing

**Convergence Control: steady state**

In the setting section where convergence is checked, two approaches can be adopted:

- the first approach is based on setting a fixed number of interactions for which it is assumed that the state of convergence has arrived at a good solution.

- the second approach is instead to monitor in real time the state of convergence through the so-called residues, then a minimum residue value is set for which the simulation must converge.

In our case, it is preferable to adopt the first approach since from previous experiences it has been found that the solution arrives at an acceptable state of convergence at 1500 iterations.
On the other hand, if activities are required with pumps connected to very long suction ducts, it is necessary to increase the number of iterations; its value depends on the case, therefore the number of iterations is increased until the pressure drops in the duct reach the convergence state.

The management of the time scale can be multiple and depending on the type of Solver, the technique more convenient to adopt the "Auto Timescale" function.

## 4.6 Expression and Monitor

Within the solver is an "output control" panel that allows you to manage how files are written by the solver; you can control which variables will be written to the steady results files and how often the files will be created.

Monitoring data can also be displayed in real-time, so you can monitor and track the progress of the solution; this allows you to examine the results before the solution is fully converged.

Solvers usually also allow for back-up saves, which can be loaded into the post-processing section for examination.

Since all monitored variables undergo temporal fluctuations due to numerical instability (and turbulent un-stationary phenomena for unsteady simulation), it is always necessary to evaluate the convergence value by averaging the last range that falls within the ±1% convergence band.



COPY COMPLIANT to the original document resident on the computer system at the time of printing

There are different reasons for evaluating the "time-invariant" variables of a stationary simulation, since the fluctuations are due only to numerical instability.

As previously stated from previous company experiences, the iterations adopted are 1500, while the iterations for which to make the average are the last 100.

In addition to the "residues" and the default variables, it is possible to set predefined expressions that can be monitored during the simulation progress.

An example of expressions is shown in Figure 4.

```
LIBRARY:
 CEL:
  &replace EXPRESSIONS:
   Etaimp1A = (areaAve(Total Pressure in Stn Frame)@leakageABimp1diff1 in IMP1 Side 1-areaAve(Total Pressure in Stn Frame)@leakAimp1 Side 2)*((massFlow()@leakageABimp1diff1 in IMP1 Side 1/2)/997)/((ph1/2)*1000)*100
   Etaimp1B = (areaAve(Total Pressure in Stn Frame)@leakageABimp1diff1 in IMP1 Side 1-areaAve(Total Pressure in Stn Frame)@leakBimp1 Side 2)*((massFlow()@leakageABimp1diff1 in IMP1 Side 1/2)/997)/((ph1/2)*1000)*100
   Etaimp2 = (areaAve(Total Pressure in Stn Frame)@impeller2leakageC Side 1 -areaAve(Total Pressure in Stn Frame)@leakCimp2 Side 2)*(massFlow()@impeller2leakageC Side 1/997)/(ph2*1000)*100
   Etaimp3 = (areaAve(Total Pressure in Stn Frame)@impeller3leakageD Side 1 -areaAve(Total Pressure in Stn Frame)@leakDimp3 Side 2)*(massFlow()@impeller3leakageD Side 1/997)/(ph3*1000)*100
   Etapump = (areaAve(Total Pressure in Stn Frame)@OUTLET -areaAve(Total Pressure in Stn Frame)@INLET)*(massFlow()@OUTLET/997)/((ph1+ph2+ph3)*1000)*100

   Etast1A = (areaAve(Total Pressure in Stn Frame)@cross1leakageC Side 1 -areaAve(Total Pressure in Stn Frame)@leakAimp1 Side 2)*(massFlow()@leakageABimp1diff1 in IMP1 Side 1/997)/(ph1*1000)*100
   Etast1B = (areaAve(Total Pressure in Stn Frame)@cross1leakageC Side 1 -areaAve(Total Pressure in Stn Frame)@leakBimp1 Side 2)*(massFlow()@leakageABimp1diff1 in IMP1 Side 1/997)/(ph1*1000)*100
   Etast2 = (areaAve(Total Pressure in Stn Frame)@cross2leakageD Side 1 -areaAve(Total Pressure in Stn Frame)@leakCimp2 Side 2)*(massFlow()@leakageCdiff2 Side 2/997)/(ph2*1000)*100
   Etast3 = (areaAve(Total Pressure in Stn Frame)@OUTLET -areaAve(Total Pressure in Stn Frame)@leakDimp3 Side 2)*(massFlow()@leakageDdiff3 Side 2/997)/(ph3*1000)*100

   LossesD1C1 = (areaAve(Total Pressure in Stn Frame)@cross1leakageC Side 1-areaAve(Total Pressure in Stn Frame)@leakageABimp1diff1 in IMP1 Side 1)/(997*g)
   LossesD2C2 = (areaAve(Total Pressure in Stn Frame)@cross2leakageD Side 1-areaAve(Total Pressure in Stn Frame)@leakageCdiff2 Side 2)/(997*g)
   LossesD3C3D = (areaAve(Total Pressure in Stn Frame)@OUTLET-areaAve(Total Pressure in Stn Frame)@leakageDdiff3 Side 2)/(997*g)
   LossesSuctionA = (areaAve(Total Pressure in Stn Frame)@suctleakA Side 1-areaAve(Total Pressure in Stn Frame)@INLET)/(997*g)
   LossesSuctionB = (areaAve(Total Pressure in Stn Frame)@suctleakB Side 1-areaAve(Total Pressure in Stn Frame)@INLET)/(997*g)

   fx1 = force_x()@Blade1+force_x()@Shroud1+force_x()@Hub1+force_x()@Impeller1_DiskA+force_x()@Impeller1_DiskB
   fx2 = force_x()@Blade2+force_x()@Shroud2+force_x()@Hub2+force_x()@Impeller2_DiskC
   fx3 = force_x()@Blade3+force_x()@Shroud3+force_x()@Hub3+force_x()@Impeller3_DiskD
   fy1 = force_y()@Blade1+force_y()@Shroud1+force_y()@Hub1+force_y()@Impeller1_DiskA+force_y()@Impeller1_DiskB
   fy2 = force_y()@Blade2+force_y()@Shroud2+force_y()@Hub2+force_y()@Impeller2_DiskC
   fy3 = force_y()@Blade3+force_y()@Shroud3+force_y()@Hub3+force_y()@Impeller3_DiskD
   fz1 = force_z()@Blade1+force_z()@Shroud1+force_z()@Hub1+force_z()@Impeller1_DiskA+force_z()@Impeller1_DiskB
   fz2 = force_z()@Blade2+force_z()@Shroud2+force_z()@Hub2+force_z()@Impeller2_DiskC
   fz3 = force_z()@Blade3+force_z()@Shroud3+force_z()@Hub3+force_z()@Impeller3_DiskC

   himp1A = (areaAve(Total Pressure in Stn Frame)@leakageABimp1diff1 in IMP1 Side 1 -areaAve(Total Pressure in Stn Frame)@leakAimp1 Side 2)/g/997
   himp1B = (areaAve(Total Pressure in Stn Frame)@leakageABimp1diff1 in IMP1 Side 1 -areaAve(Total Pressure in Stn Frame)@leakBimp1 Side 2)/g/997
   himp2 = (areaAve(Total Pressure in Stn Frame)@impeller2leakageC Side 1 -areaAve(Total Pressure in Stn Frame)@leakCimp2 Side 2)/g/997
   himp3 = (areaAve(Total Pressure in Stn Frame)@impeller3leakageD Side 1 -areaAve(Total Pressure in Stn Frame)@leakDimp3 Side 2)/g/997
   hp = (areaAve(Total Pressure in Stn Frame)@OUTLET -areaAve(Total Pressure in Stn Frame)@INLET)/g/997

   hst1A = (areaAve(Total Pressure in Stn Frame)@cross1leakageC Side 1 -areaAve(Total Pressure in Stn Frame)@leakAimp1 Side 2)/g/997
   hst1B = (areaAve(Total Pressure in Stn Frame)@cross1leakageC Side 1 -areaAve(Total Pressure in Stn Frame)@leakBimp1 Side 2)/g/997
   hst2 = (areaAve(Total Pressure in Stn Frame)@cross2leakageD Side 1 -areaAve(Total Pressure in Stn Frame)@leakCimp2 Side 2)/g/997
   hst3 = (areaAve(Total Pressure in Stn Frame)@OUTLET -areaAve(Total Pressure in Stn Frame)@leakDimp3 Side 2)/g/997

   massflowLEAKAB = (massFlow()@leakAimp1 Side 2+massFlow()@leakAimp1 Side 2) - massFlow()@leakageABimp1diff1 in IMP1 Side 1
   massflowLEAKC = massFlow()@leakDimp3 Side 2 - massFlow()@leakageDdiff3 Side 2
   massflowLEAKCB = massFlow()@leakCleakB Side 1
   massflowLEAKDC = massFlow()@leakDleakC Side 1
   massflowOUTPUMP = massFlow()@OUTLET

   ph1 = poweri1+pvent1
   ph2 = poweri2+pvent2
   ph3 = poweri3+pvent3
   poweri1 = abs(torque_z()@Blade1+torque_z()@Hub1+torque_z()@Shroud1)*2980/60*2*pi/1000
   poweri2 = abs(torque_z()@Blade2+torque_z()@Hub2+torque_z()@Shroud2)*2980/60*2*pi/1000
   poweri3 = abs(torque_z()@Blade3+torque_z()@Hub3+torque_z()@Shroud3)*2980/60*2*pi/1000
   pvent1 = abs(torque_z()@Impeller1_DiskA+torque_z()@Impeller1_DiskB)*2980/60*2*pi/1000
   pvent2 = abs(torque_z()@Impeller2_DiskC)*2980/60*2*pi/1000
   pvent3 = abs(torque_z()@Impeller3_DiskD)*2980/60*2*pi/1000
  END
 END
END
```

*Figure 4 : Example Expression of model pump BB5 3 stages*

In Figure 4, the monitored variables main are:

- Impellers/stages/pump efficiency
- impellers/stages/pump head



COPY COMPLIANT to the original document resident on the computer system at the time of printing

- power absorbed by the rotor group (or divided into individual impellers)
- losses static component
- forces applied on the rotor group (or divided into individual impellers) respect to the axes of the global reference system

Many others can be inserted and monitored; the number and their complexity depend on the complexity of the pump model and the analysis activity.

## 4.7 Setting files for batch mode

During the redesign and optimization phase of a particular hydraulic pump component, there is usually a tendency to repeat the preparation phases of the pump model and its setting.
Since the investigation concerns the single component, it is possible to prepare a series of modifications, chosen at priori, on the main geometric parameters that characterize the geometry of the component of interest.
Following this logic and working method, the tool builders have specifically created batch files with the aim of automating and speeding up this preparation phase.

Taking the CFX tool as a particular example, it is possible to create two files, listed below:

CCL file: it contains the setting created in the current state at the moment in which this file is saved. Therefore, in the initial preparation phase of the model, it is possible to 1) import the new meshes 2) move, rotate, mirror for a correct position of the component 3) load the previously saved ccl 4) Assign mesh locations to the domains and boundary conditions; in this way is possible to obtain the same model but with different geometries and meshes.

CSE file: by enabling the "recording session" option at the start the model preparation phase, it is possible to record all the instructions executed during this phase, therefore including also the previous steps 1) 2) and 4). At the end of recording session is possible to save a file called .cse. Therefore, using this batch allows you to automate the generation of .def file completely overcoming the preparation phase of the model.


COPY COMPLIANT to the original document resident on the computer system at the time of printing

## 4.8 Summary of the setting

The following table Table 4 summarizes the setting to be set for this SOP:

| | |
|---|---|
| **Type of Analysis** | Steady State |
| **Model Fluid** | • Water at 25°C (with his properties, see Table 2)<br>• Morphology: continuous fluid<br>• Reference Pressure: 1 atm<br>• Buoyancy model: not buoyant<br>• Domain Motion: rotation equal to rotor speed<br>• Eq. Heat Transfer: isothermal<br>• Turbulence Model: SST |
| **Boundary Conditions** | • Inlet: Total Pressure [Pa]; subsonic flow regime; normal flow direction; Turbulence Intensity 5% @inlet domain<br>• Outlet: Mass flow rate [kg/s] @outlet domain<br>• Wall rotating: speed rotation [rpm]<br>wall roughness [micron] @hub, shroud, blade domain<br>wall roughness [micron] @ wall casing domain<br>• Interface: General Connection, Mixing Plane, Periodic and Frozen Rotor |
| **Solver Control** | • First-order scheme<br>• Max. iteration convergence control: 1500 (the last 100 for the average correct value)<br>• Timescale control: Auto Timescale (length scale option: conservative, timescale factor 1) |
| **Expressions and monitor** | • Efficiency impellers/stages/pump<br>• Head impellers/stages/pump<br>• Power impellers/pump<br>• losses static component<br>• Fx,Fy,Fz impellers/pump |

*Table 4 : Setting*



COPY COMPLIANT to the original document resident on the computer system at the time of printing

# 5 Acceptance criteria.

This procedure is applicable for any geometry of impeller, suction, cross-over, volute and diffuser (Table 5, Table 6, Table 7, Table 8, Table 9).

In the following tables are described the different typologies of rotor and static component which constitute a centrifugal pump:

Type impeller

| Component or feature | Radial | Semi-axial | Axial |
|---|---|---|---|
| (A) Impeller form: Characteristic: flow direction at impeller exit | | | |
| (B) Impeller type | Closed (shrouded) 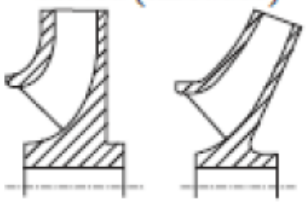 | Semi-open 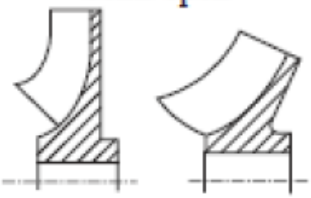 | Open 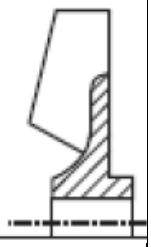 |

Table 5 : Type of geometry impeller [1]

| Type suction casings | | | |
|---|---|---|---|
| Barrel pump (radial split) | | Double suction (axial split) | |
| anulus | Spiral shaped | asymmetrical | quasi-symmetrical |
| 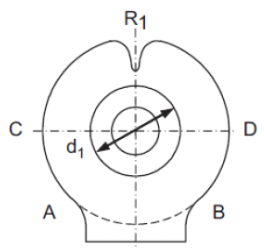  | 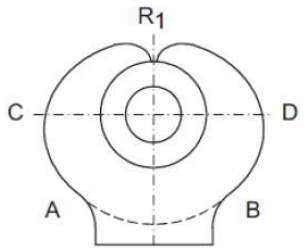  | 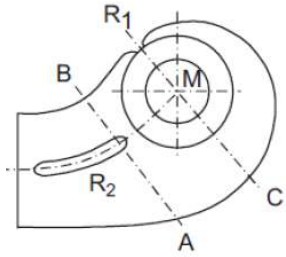  | 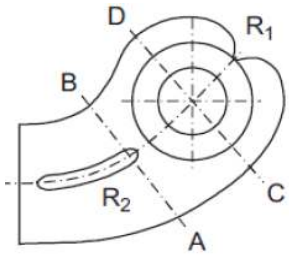  |

*Table 6 : Type of geometry suction [1]*



COPY COMPLIANT to the original document resident on the computer system at the time of printing

Short and long cross-over for multistage

| Short Cross-over | Long Cross-over |
|---|---|
| | |

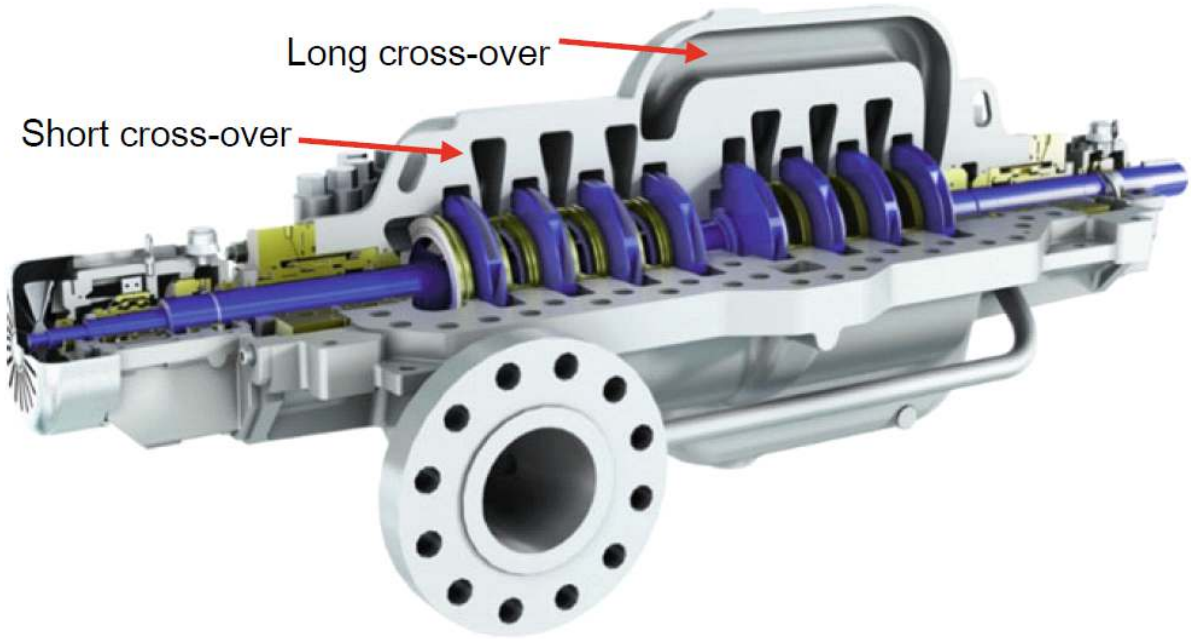


*Table 7 : Type of geometry cross-over [1]*



COPY COMPLIANT to the original document resident on the computer system at the time of printing

| Type volute casings | | |
|---|---|---|
| Single volute | Double volute | Twin volute |

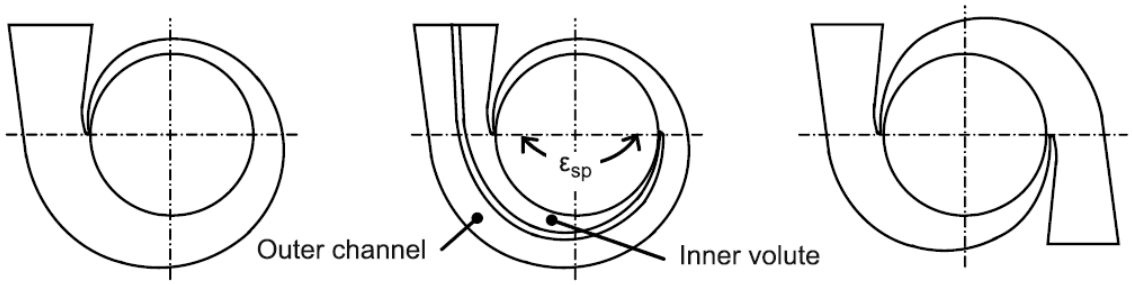


*Table 8 : Type of geometry volute [1]*

| Type diffusers casings (diffusers and return vanes separated) | | | |
|---|---|---|---|
| Diffuser with volute | Diffuser and annular casing as last stage | Overflow from diffuser to return vanes through vaneless annuls | Lateral overflow from diffuser to return vanes |

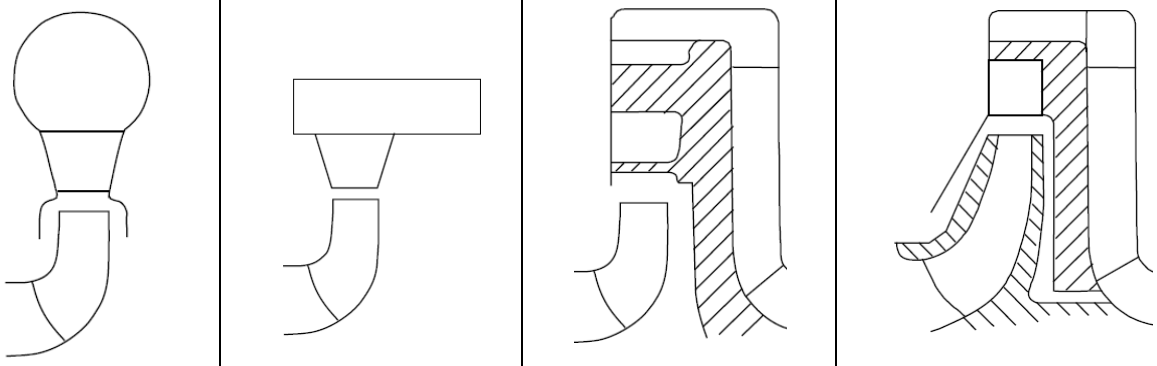

Type diffusers casings (diffusers and return vanes continue)



COPY COMPLIANT to the original document resident on the computer system at the time of printing

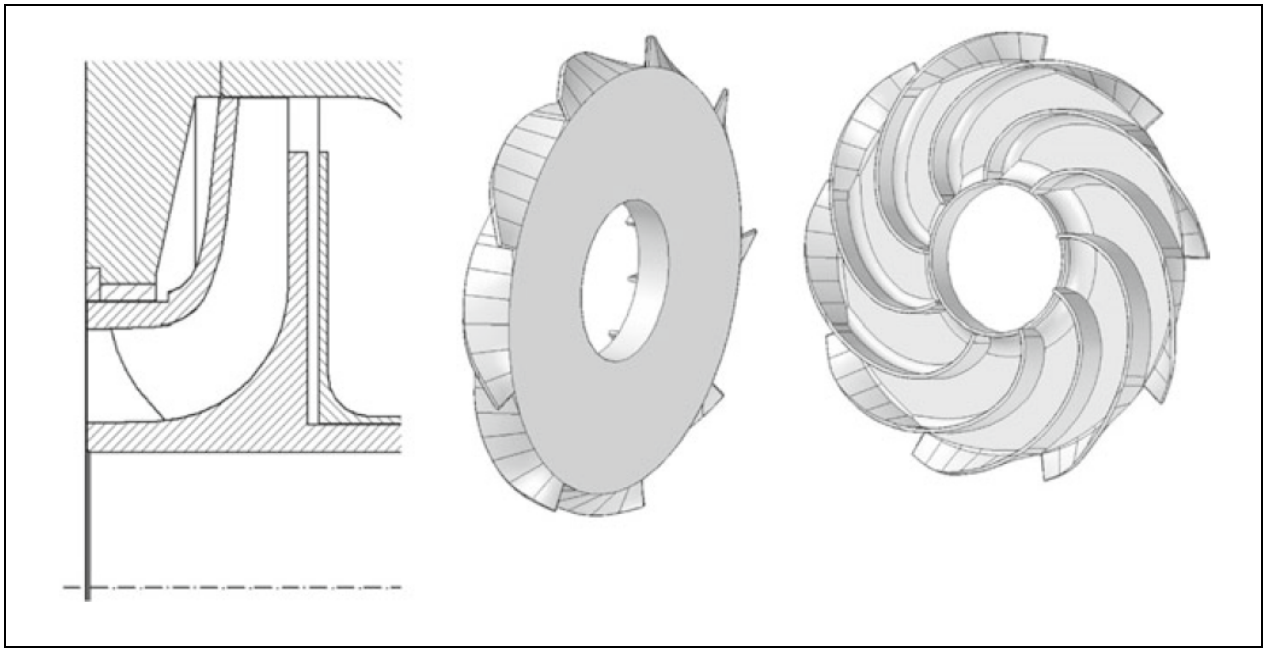

*Table 9 : Type of geometry diffuser [1]*

By the type of pump will be necessary to work on different composition of this part of pump.

# 6 References

*[1] Gulich "Centrifugal Pumps" ,4th.ed.*

*[2] Ansys User Manual*

*[3] https://www.cfd-online.com/*



COPY COMPLIANT to the original document resident on the computer system at the time of printing

# Annex A

This section summarizes the main steps to be able to set up an example of pump model (BB5 3 stages) using the CFX Solver tool in the ANSYS environment:

- Access the CFX-Pre setting environment (see Figure 5).

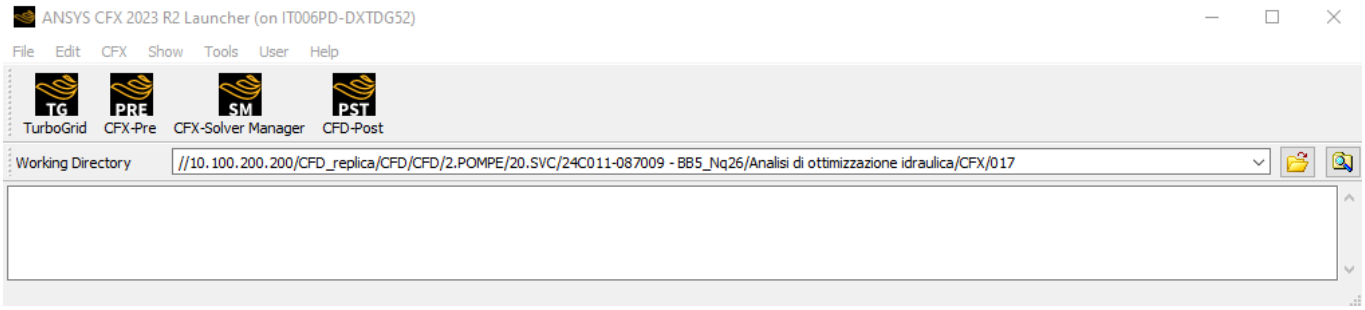


*Figure 5 : CFX-Pre environment*

- Start “Play Session” in order to recorder the activity and create the file.cse (see Figure 6)

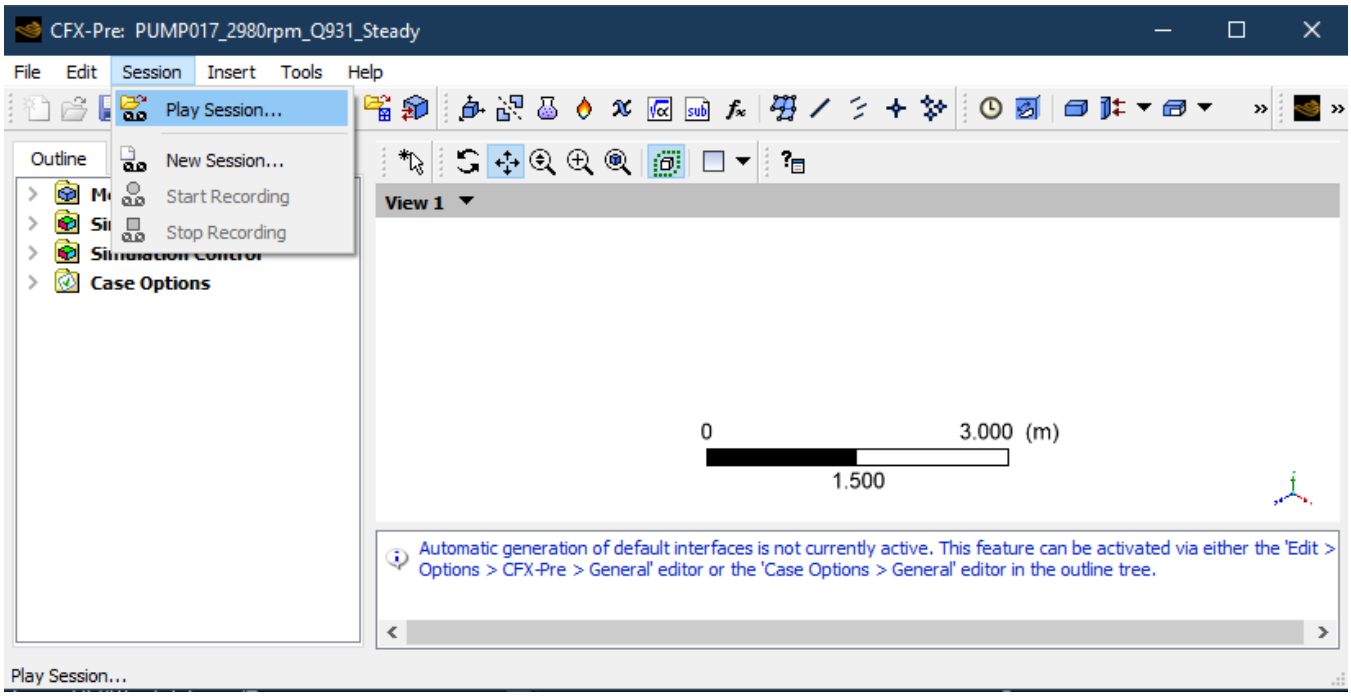


*Figure 6 : Play Session*



COPY COMPLIANT to the original document resident on the computer system at the time of printing

- Import every single mesh, selecting the correct mesh tool (see Figure 7).

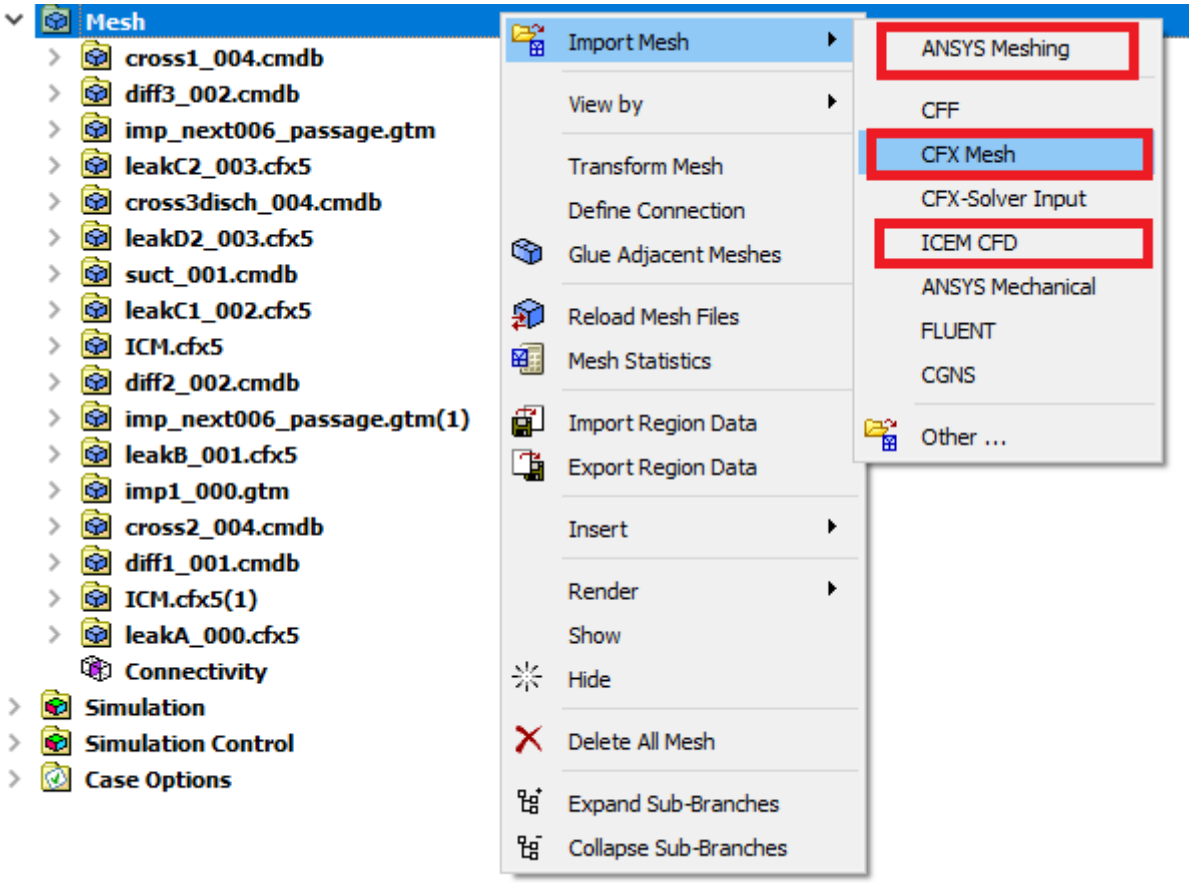


*Figure 7 : Import Mesh*

- Select the type of steady-state analysis (see Figure 8)

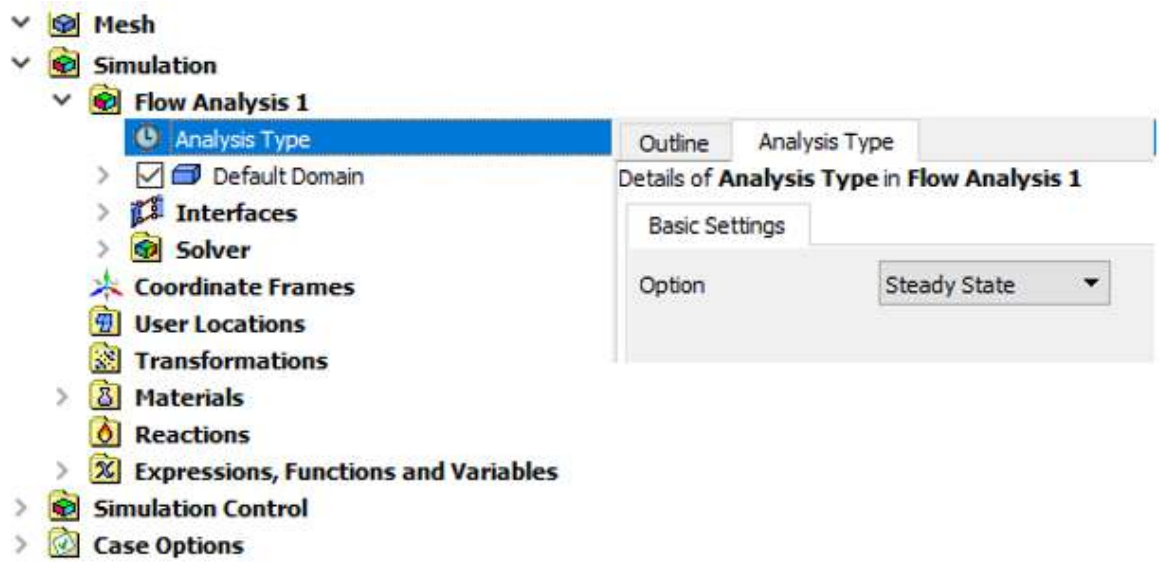


*Figure 8 : Setting Steady State Analysis*



COPY COMPLIANT to the original document resident on the computer system at the time of printing

- Realize the fluid model setting as shown in the figure, remembering to set rotation for rotating domains (see Figure 9)

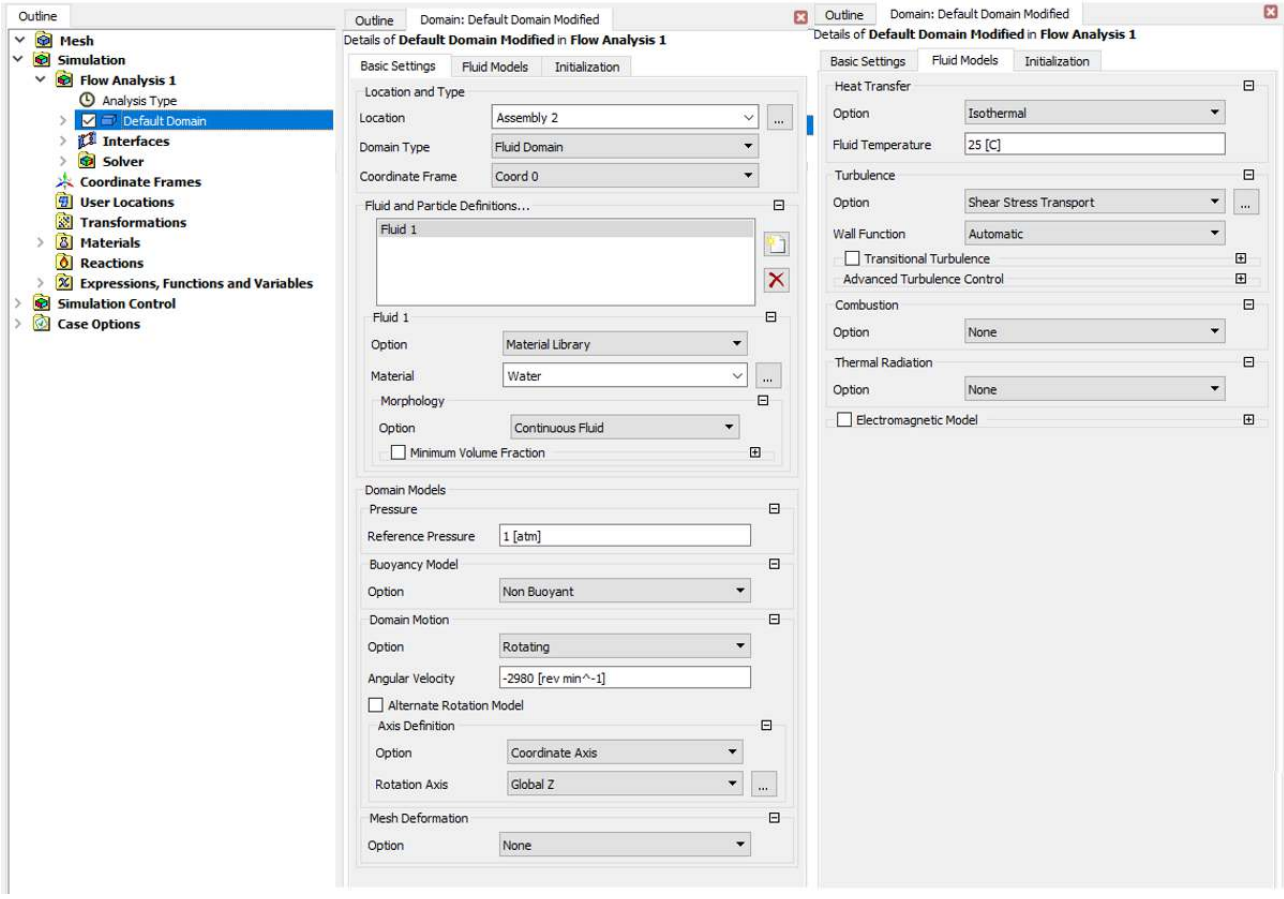


*Figure 9 : Setting Model Fluid*



COPY COMPLIANT to the original document resident on the computer system at the time of printing

- Create the blade setting as shown in the figure (see Figure 10), and with the same way set hub and shroud for every impeller

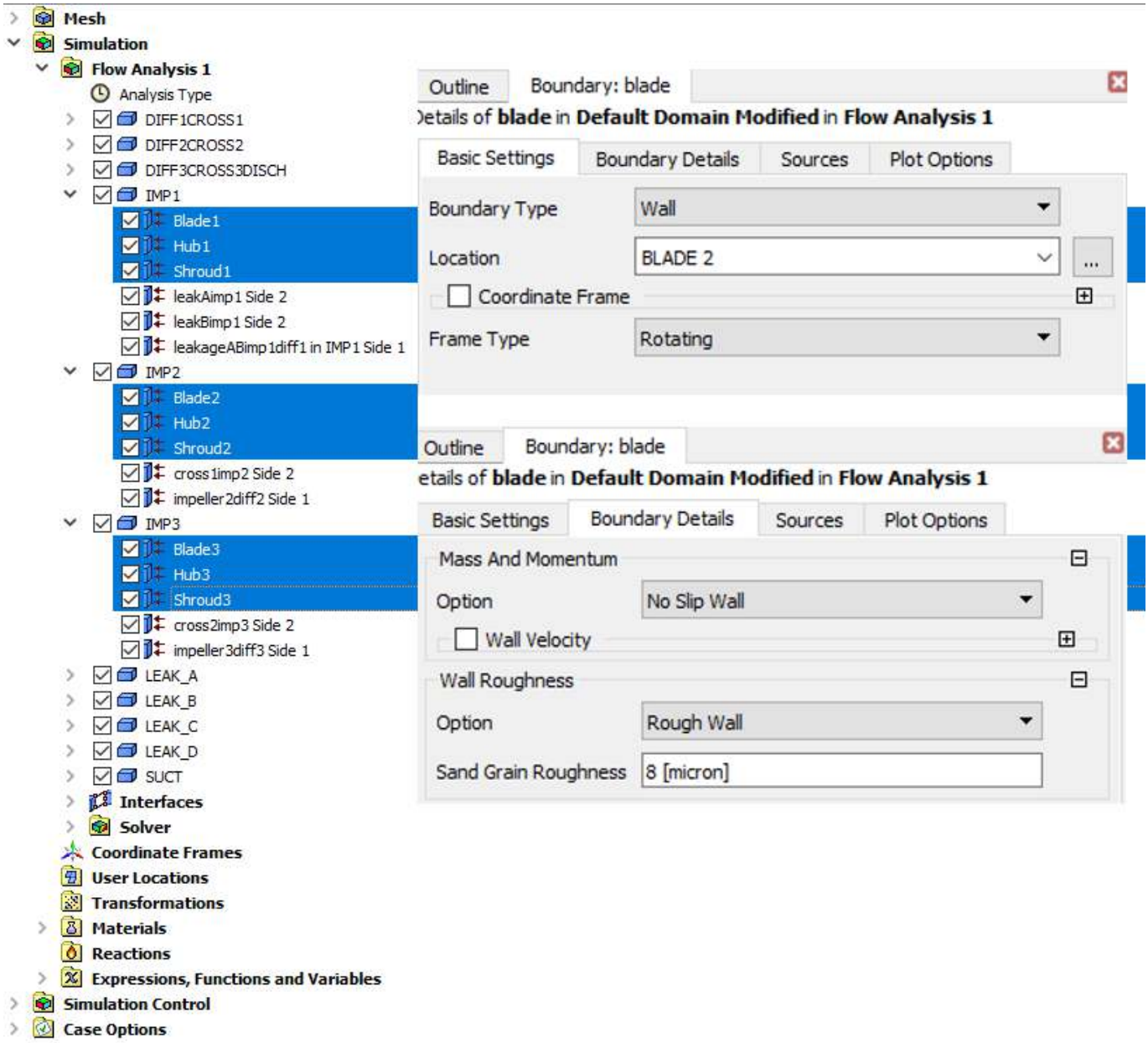


While for all other stator walls it applies the relative roughness (typically 15 microns for the stator bodies instead smooth for wear rings and impeller disks).

*Figure 10 : Setting wall condition and roughness*



COPY COMPLIANT to the original document resident on the computer system at the time of printing

- Create the inlet setting as shown in the figure (see Figure 11).

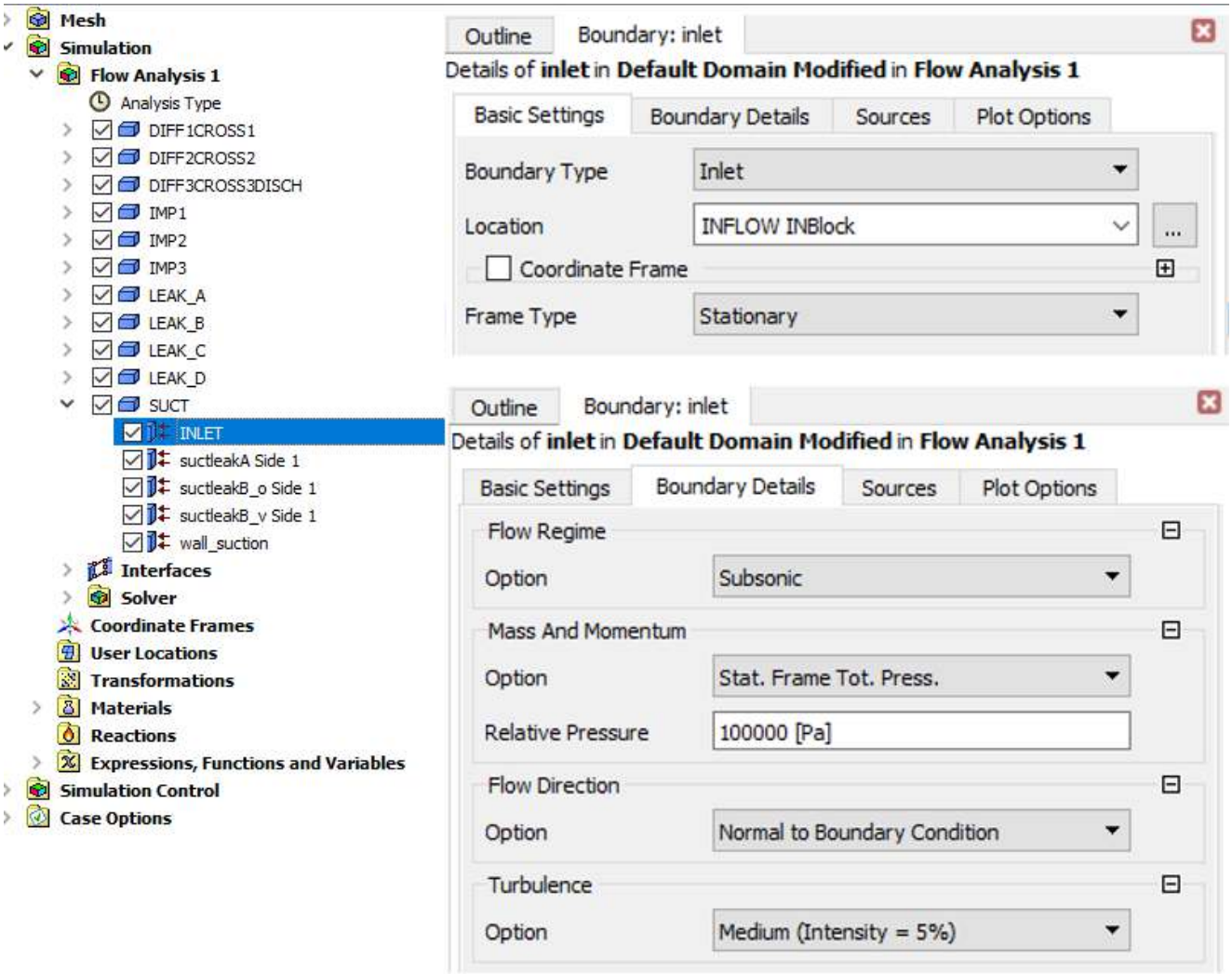


*Figure 11 : Setting Inlet*



COPY COMPLIANT to the original document resident on the computer system at the time of printing

- Create the outlet setting as shown in the figure (see Figure 12).

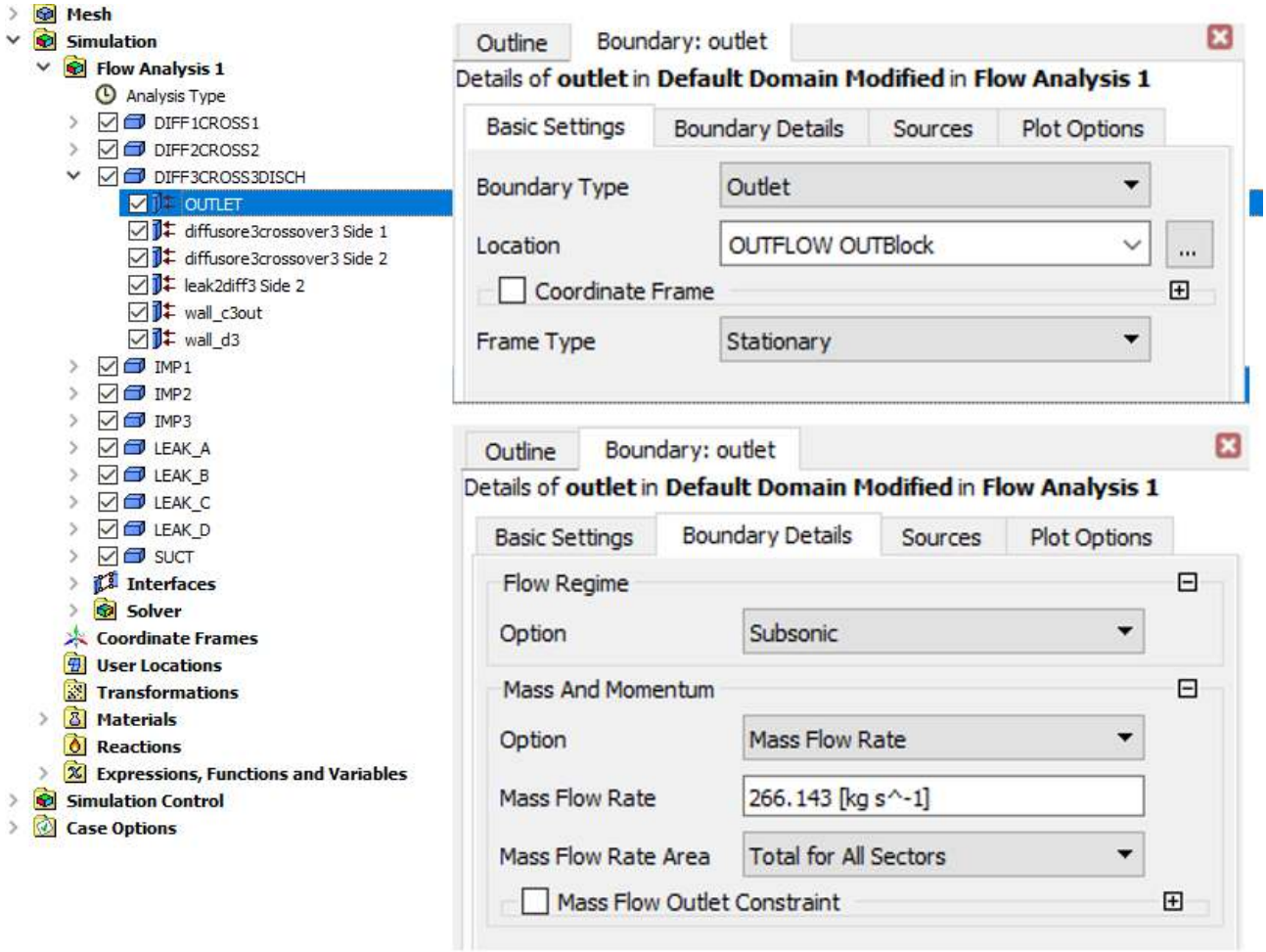


*Figure 12 : Setting Outlet*



COPY COMPLIANT to the original document resident on the computer system at the time of printing

- Create the interface setting as shown in the figure (see Figure 13), using the "General Connection" setting for fixed interfaces and the "Frozen Rotor" setting for rotor-stator interfaces instead.

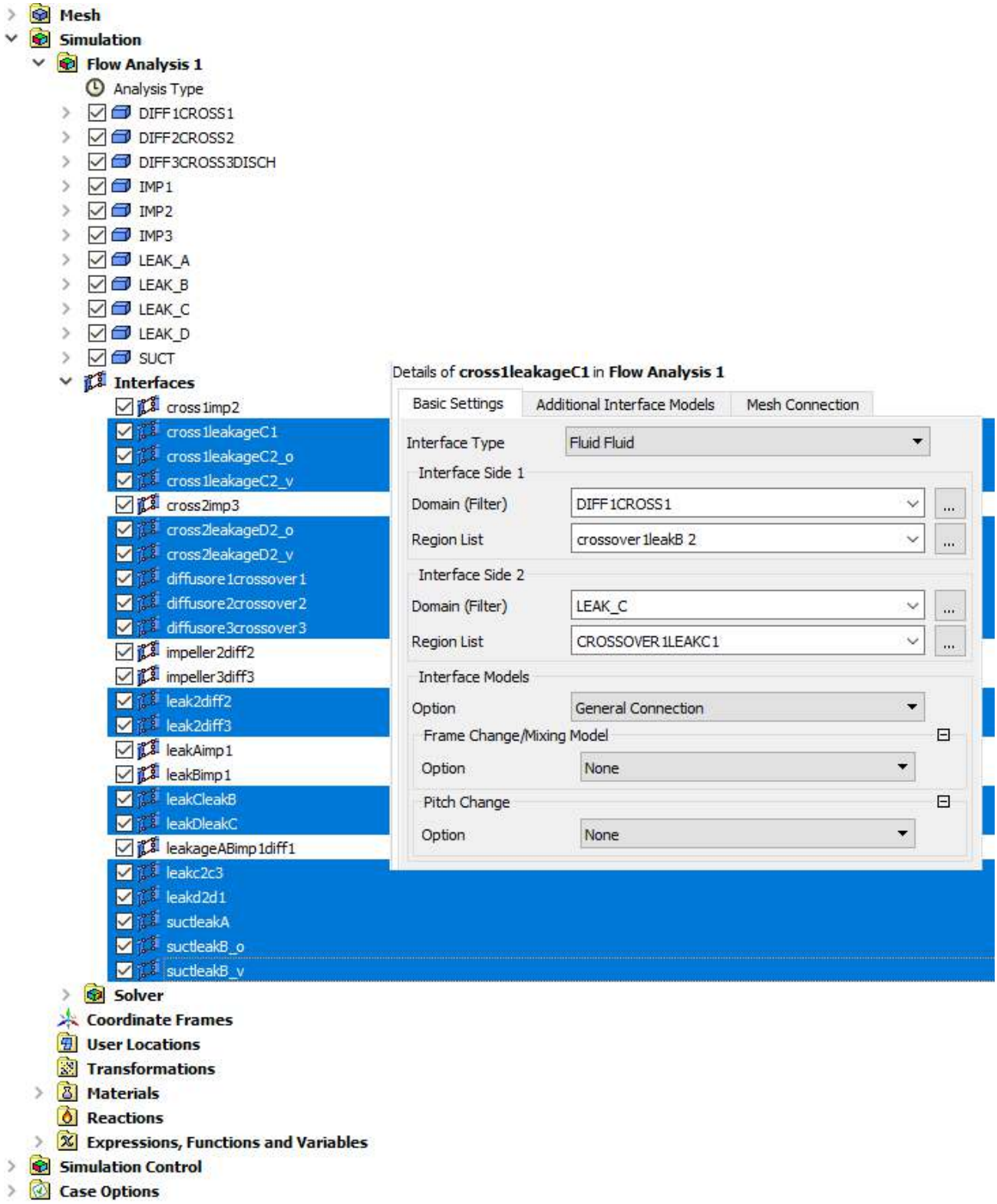




COPY COMPLIANT to the original document resident on the computer system at the time of printing

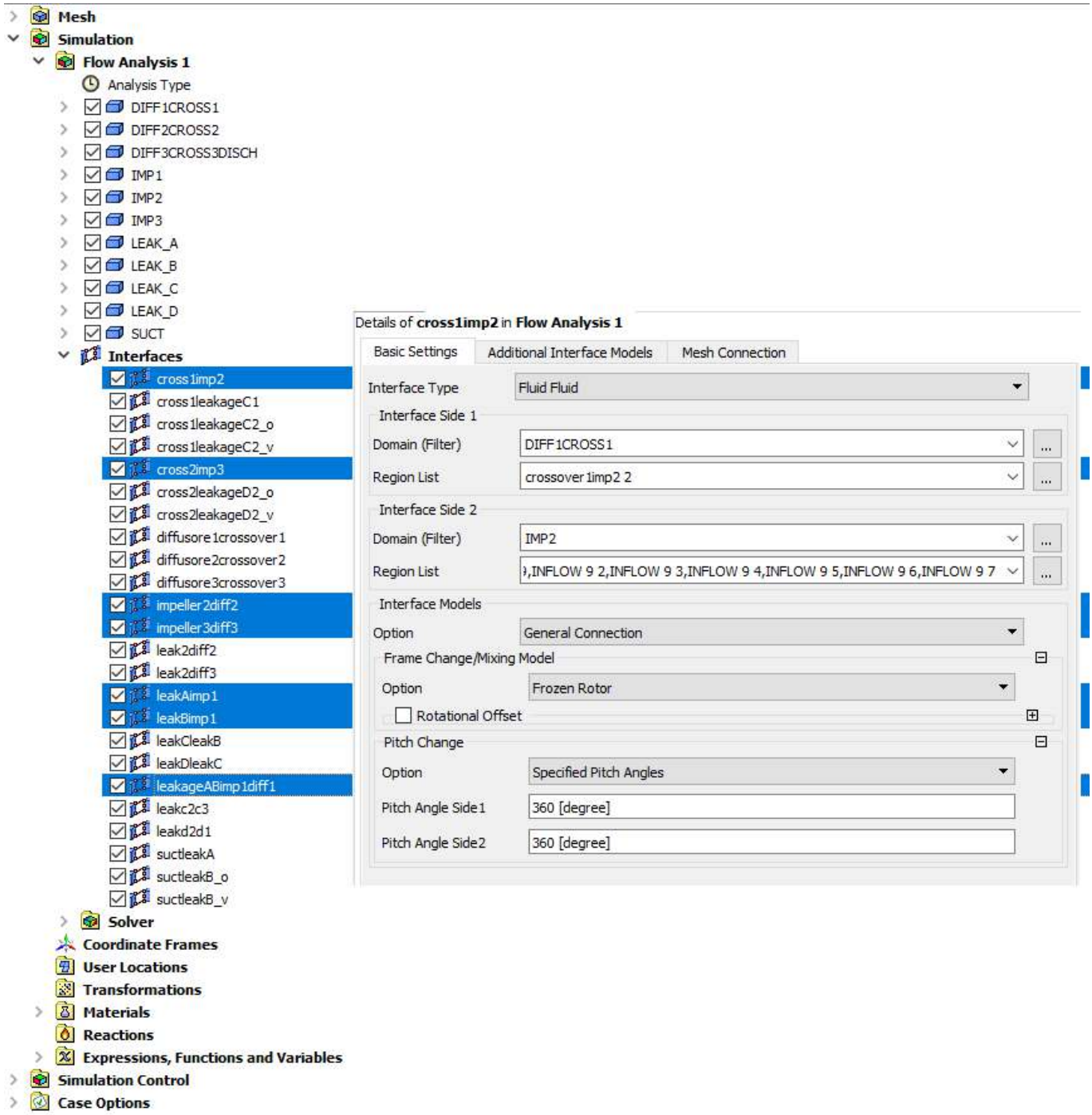


*Figure 13 : Setting Interfaces*



COPY COMPLIANT to the original document resident on the computer system at the time of printing

At the end of these first steps the domain of the pump will assume the following configuration as shown in Figure 14:

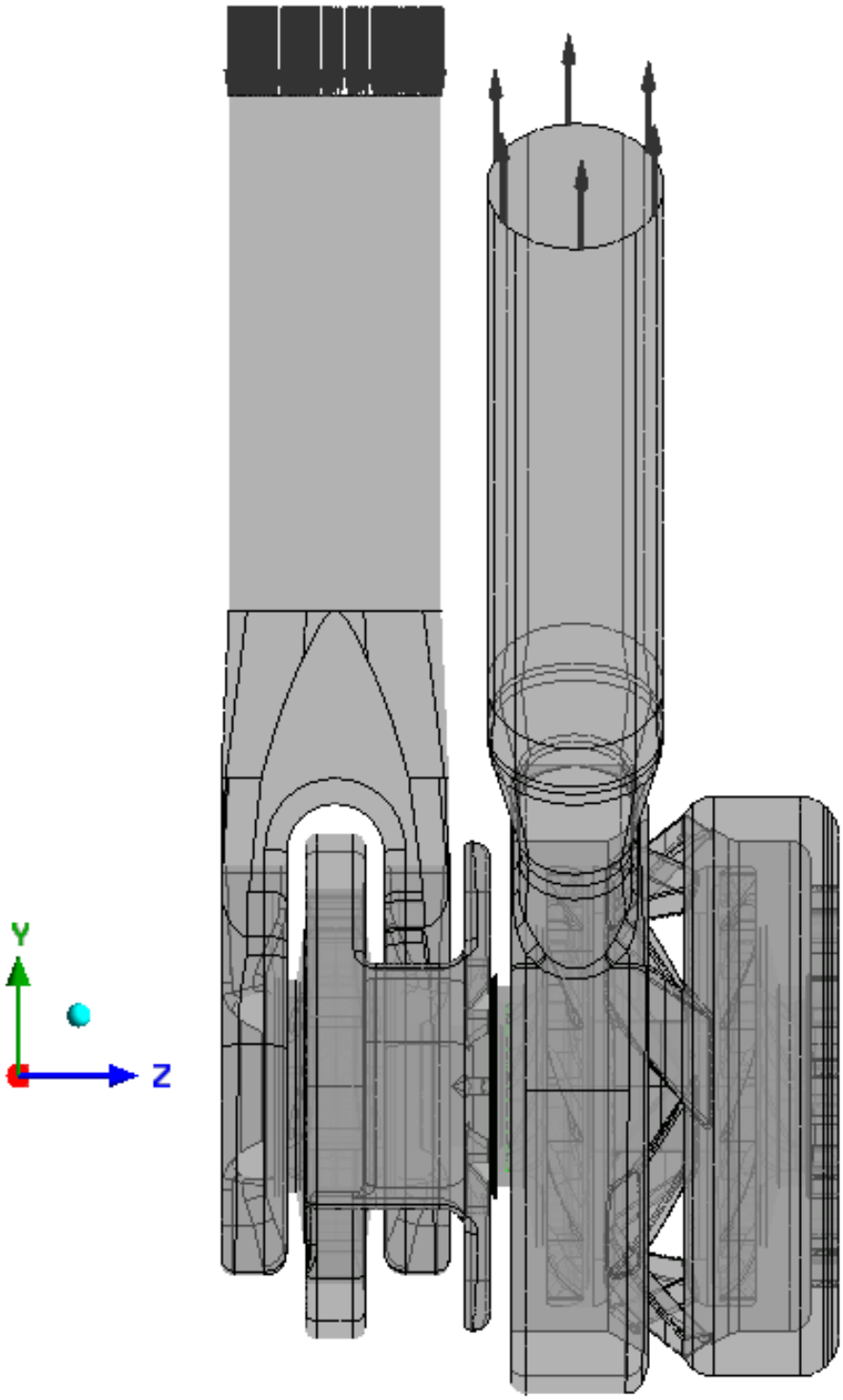


*Figure 14 : Boundary Condition applied on pump domain*



COPY COMPLIANT to the original document resident on the computer system at the time of printing

- Create the setting of “Solver Control” as shown in the figure (see Figure 15)

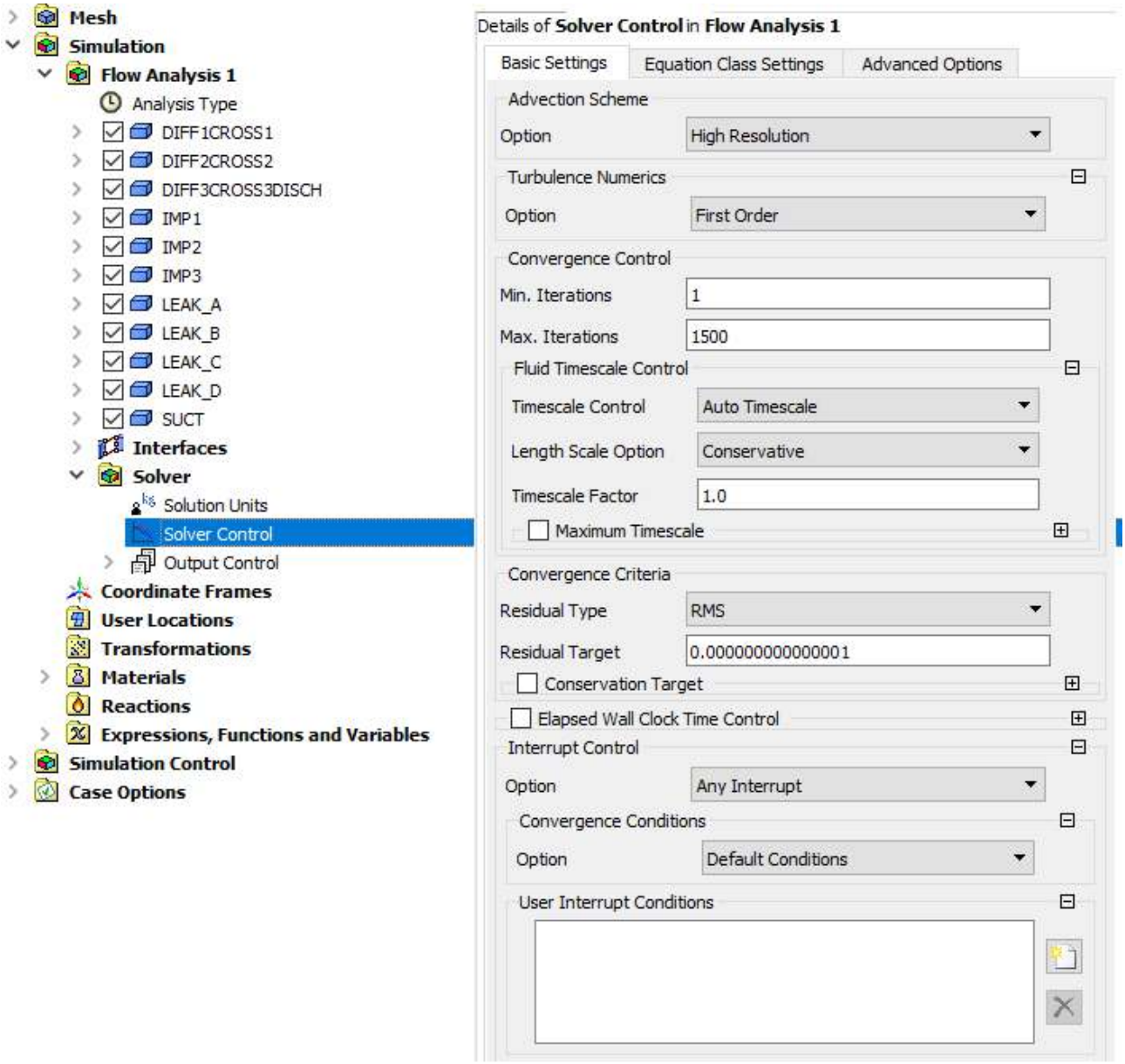


*Figure 15 : Solver Control*



COPY COMPLIANT to the original document resident on the computer system at the time of printing

- Create the Expressions as shown in the figure (see Figure 16)

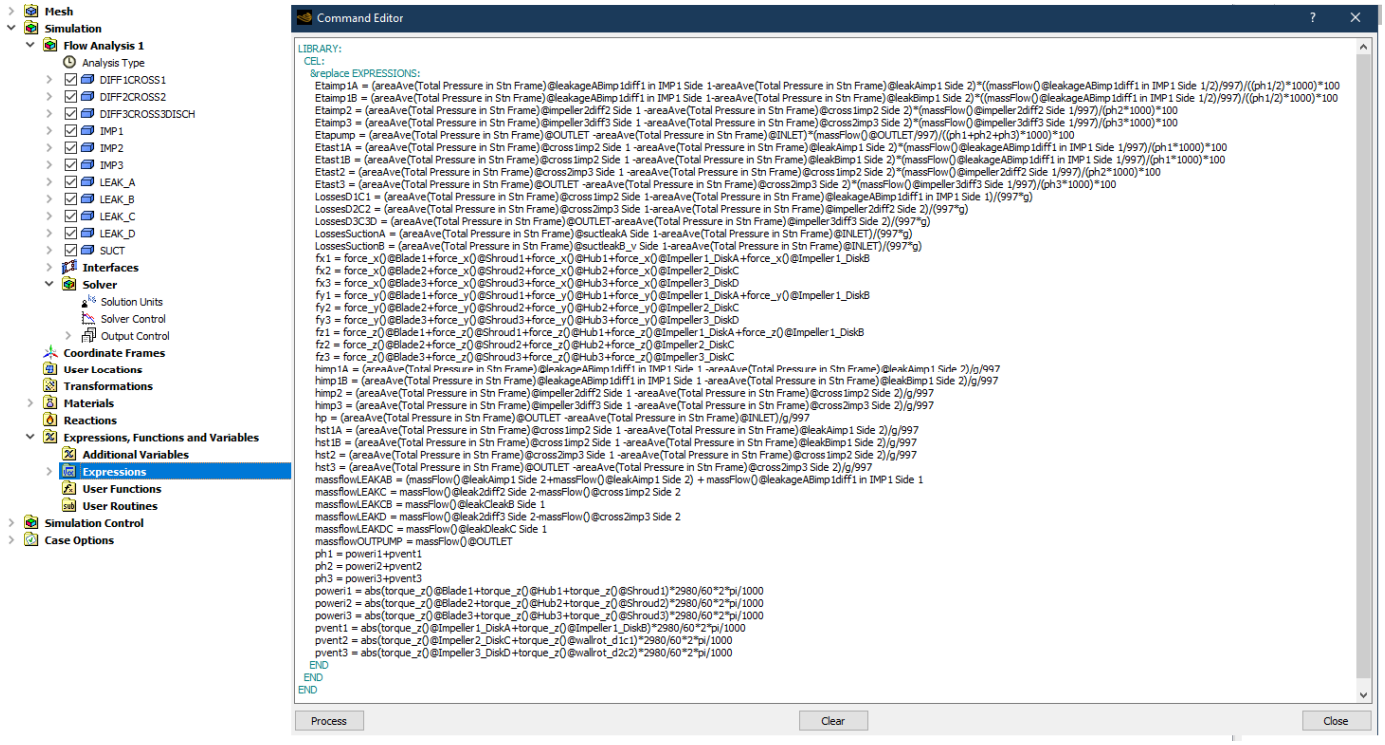


*Figure 16 : Setting Expressions*



COPY COMPLIANT to the original document resident on the computer system at the time of printing

- Create the Monitors for every expression as shown in the figure (see Figure 17)

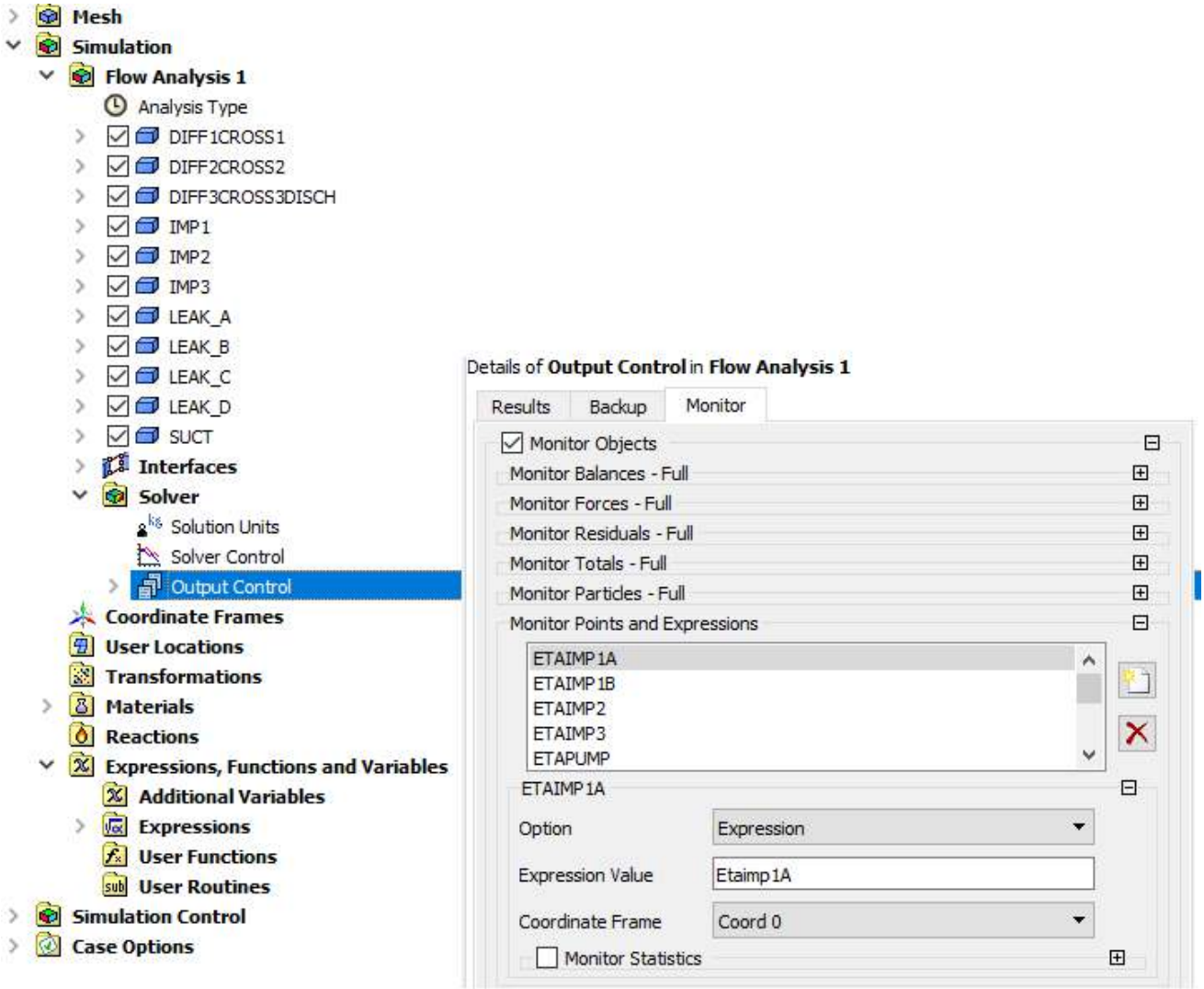


*Figure 17 : Setting Monitor for Expressions*



COPY COMPLIANT to the original document resident on the computer system at the time of printing

- Save the solver input file with .def format as shown in Figure 18:

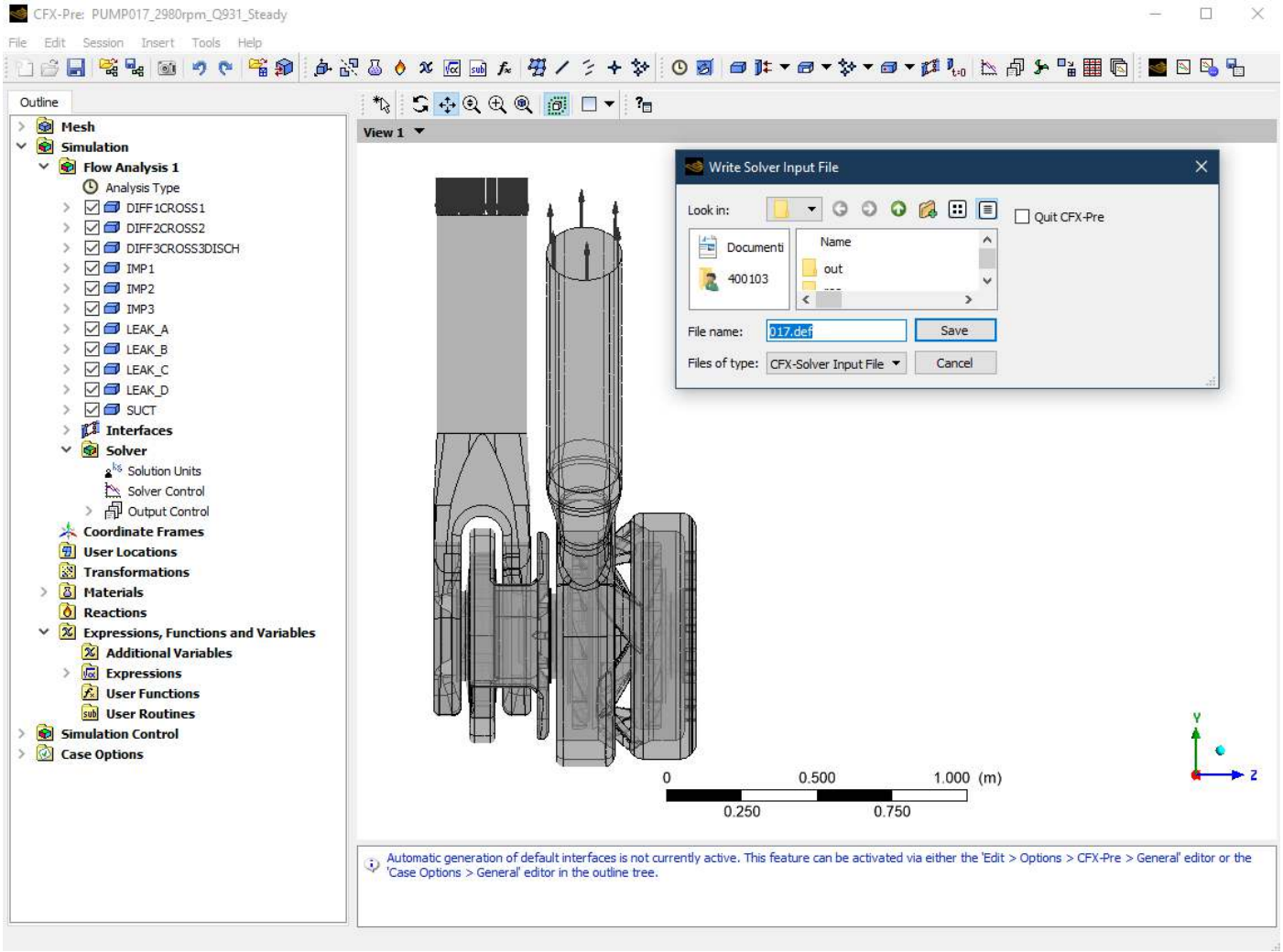


*Figure 18 : Write Solver Input File*



COPY COMPLIANT to the original document resident on the computer system at the time of printing

- At the end, Stop and Save the Session of recording and save the file .cse and .ccl as shown in Figure 19

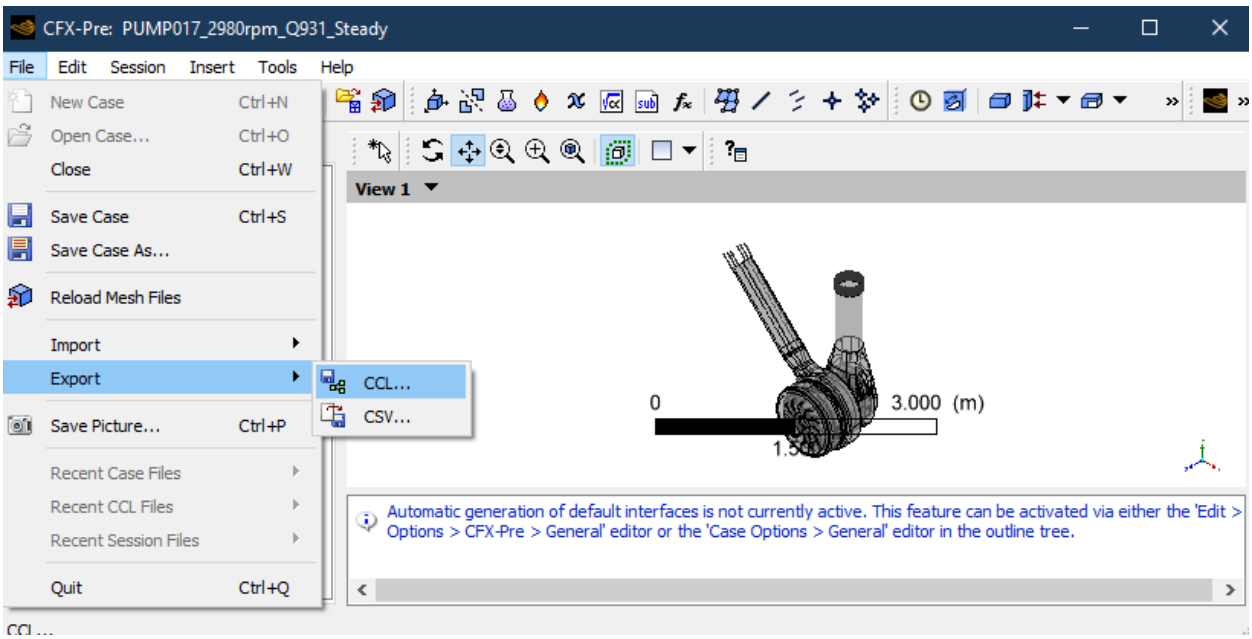


*Figure 19 : Save ccl file*



COPY COMPLIANT to the original document resident on the computer system at the time of printing

# Annex B: Pump type (*API STANDARD 610)*

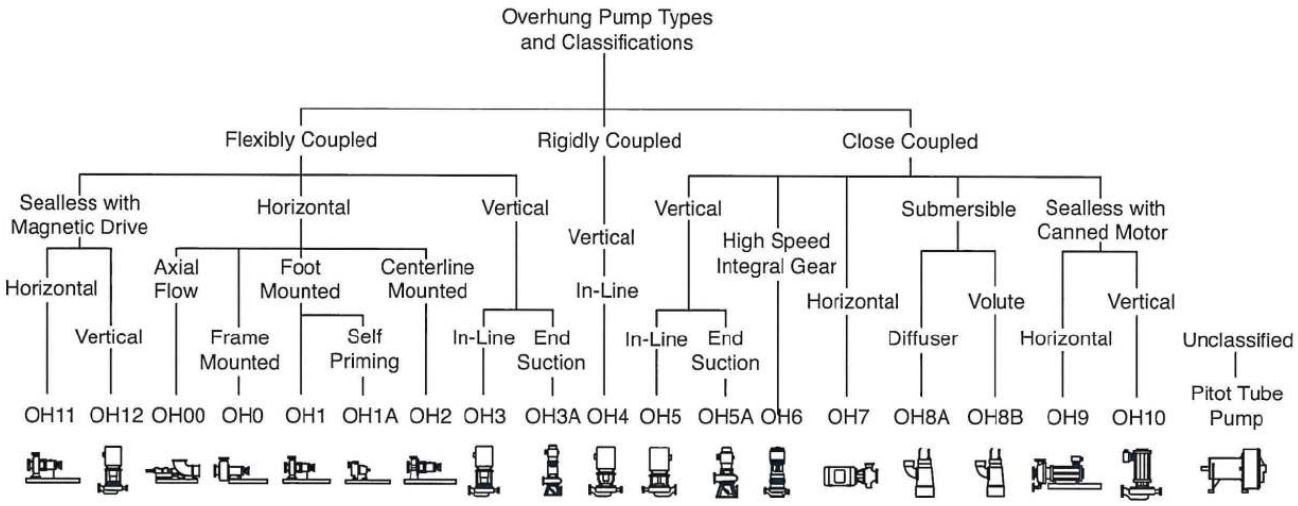


*Figure 20 : Overhung pumps*

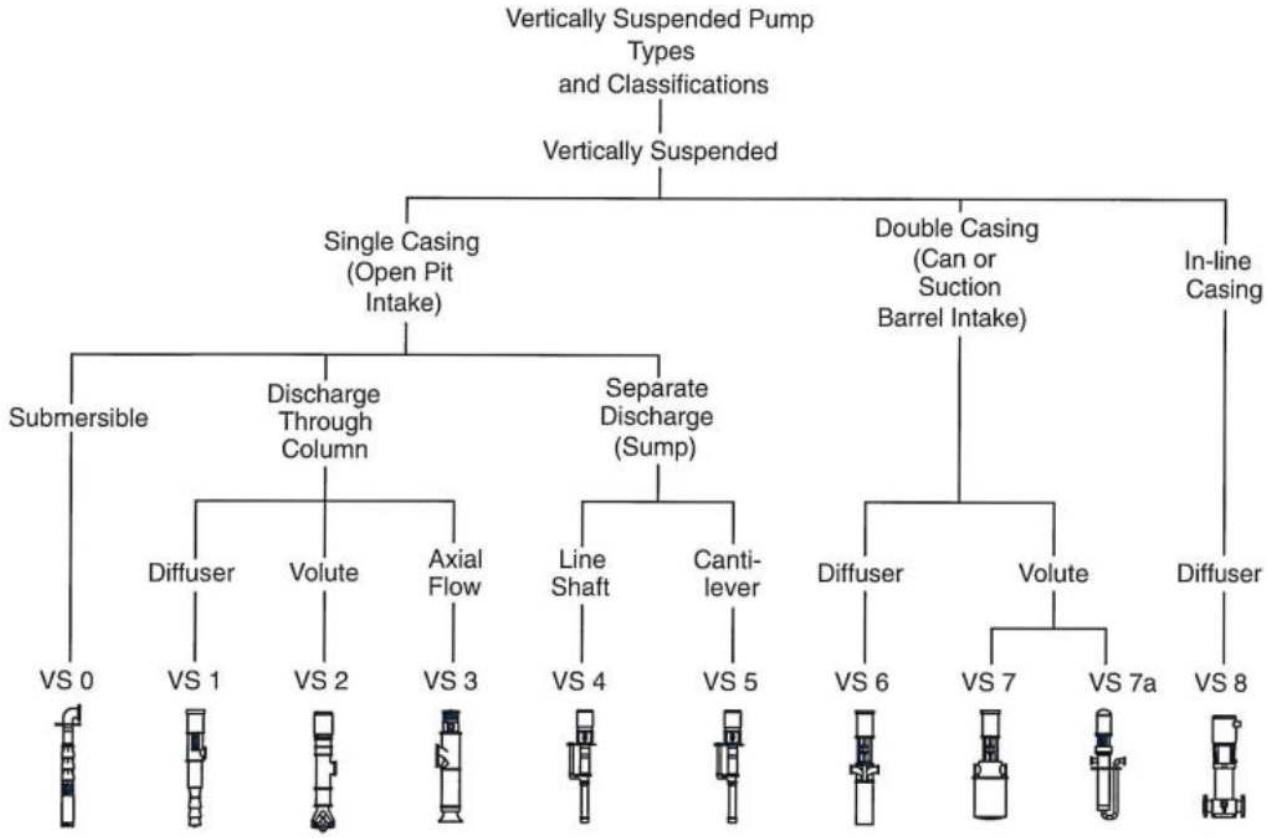


*Figure 21 : Vertically suspended pumps*



COPY COMPLIANT to the original document resident on the computer system at the time of printing

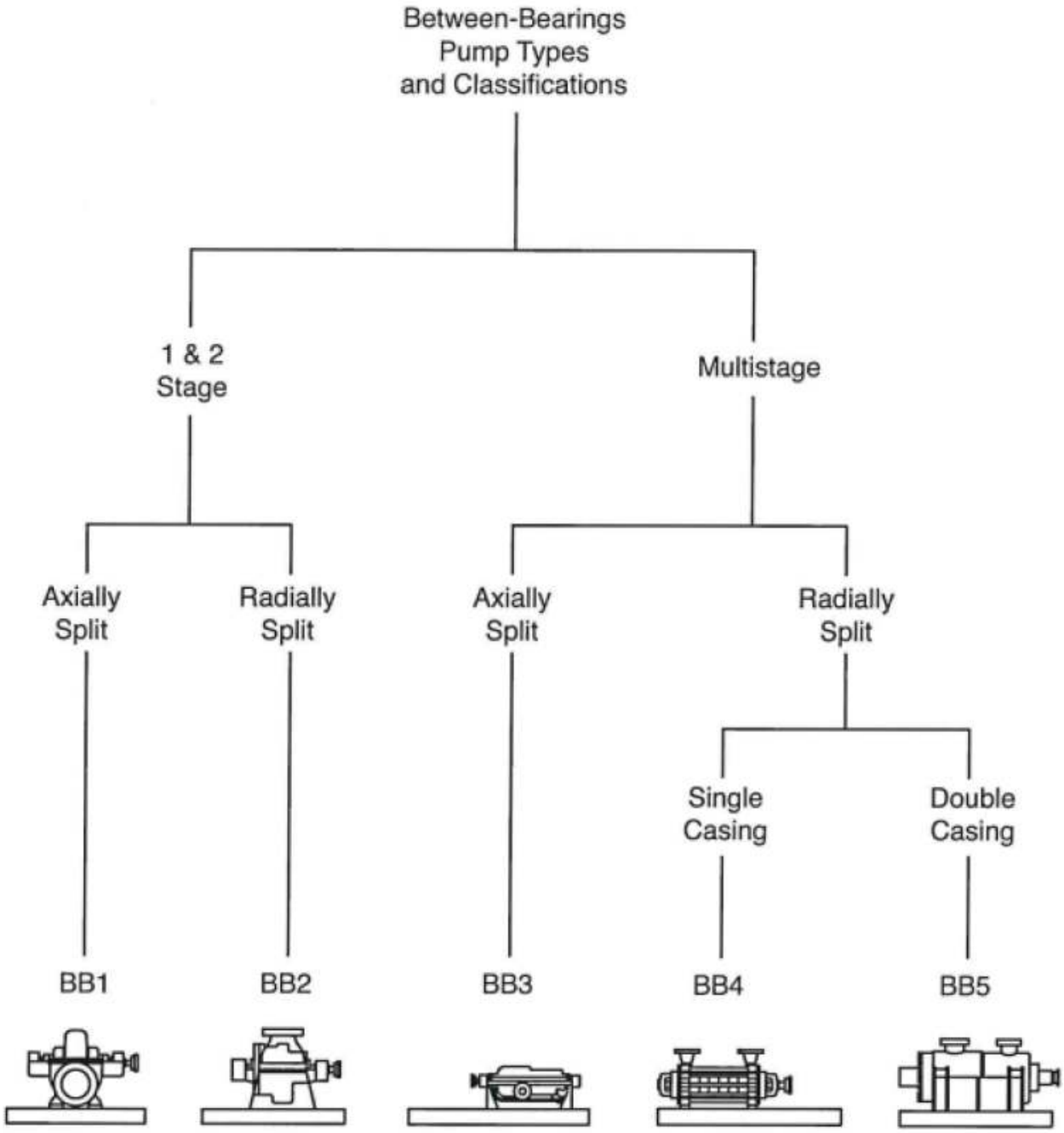


*Figure 22 : Between bearings pumps*



COPY COMPLIANT to the original document resident on the computer system at the time of printing